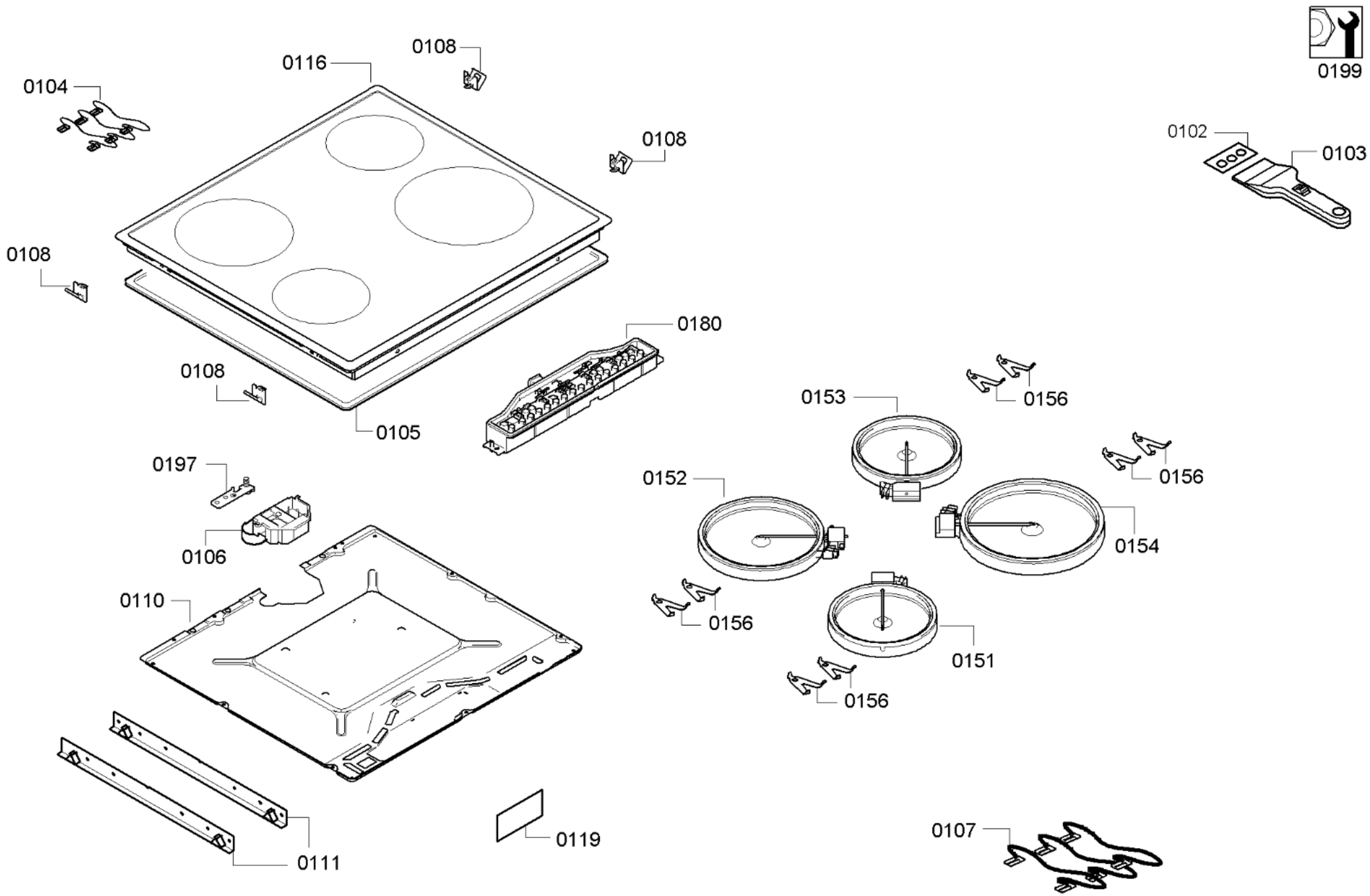

58300000136353 aet 000 a 1/1