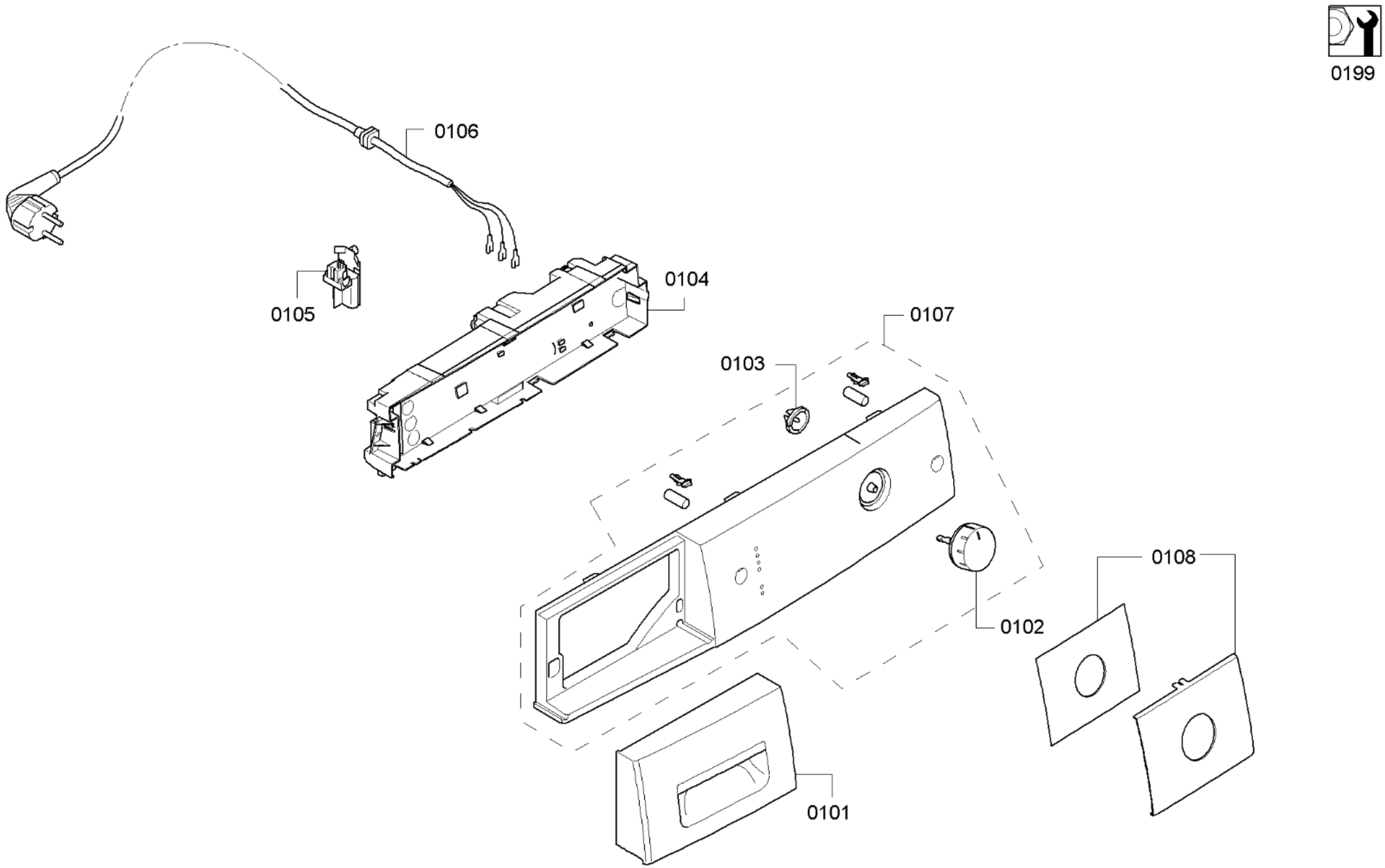

58300000158330 aet 000 a 1/5

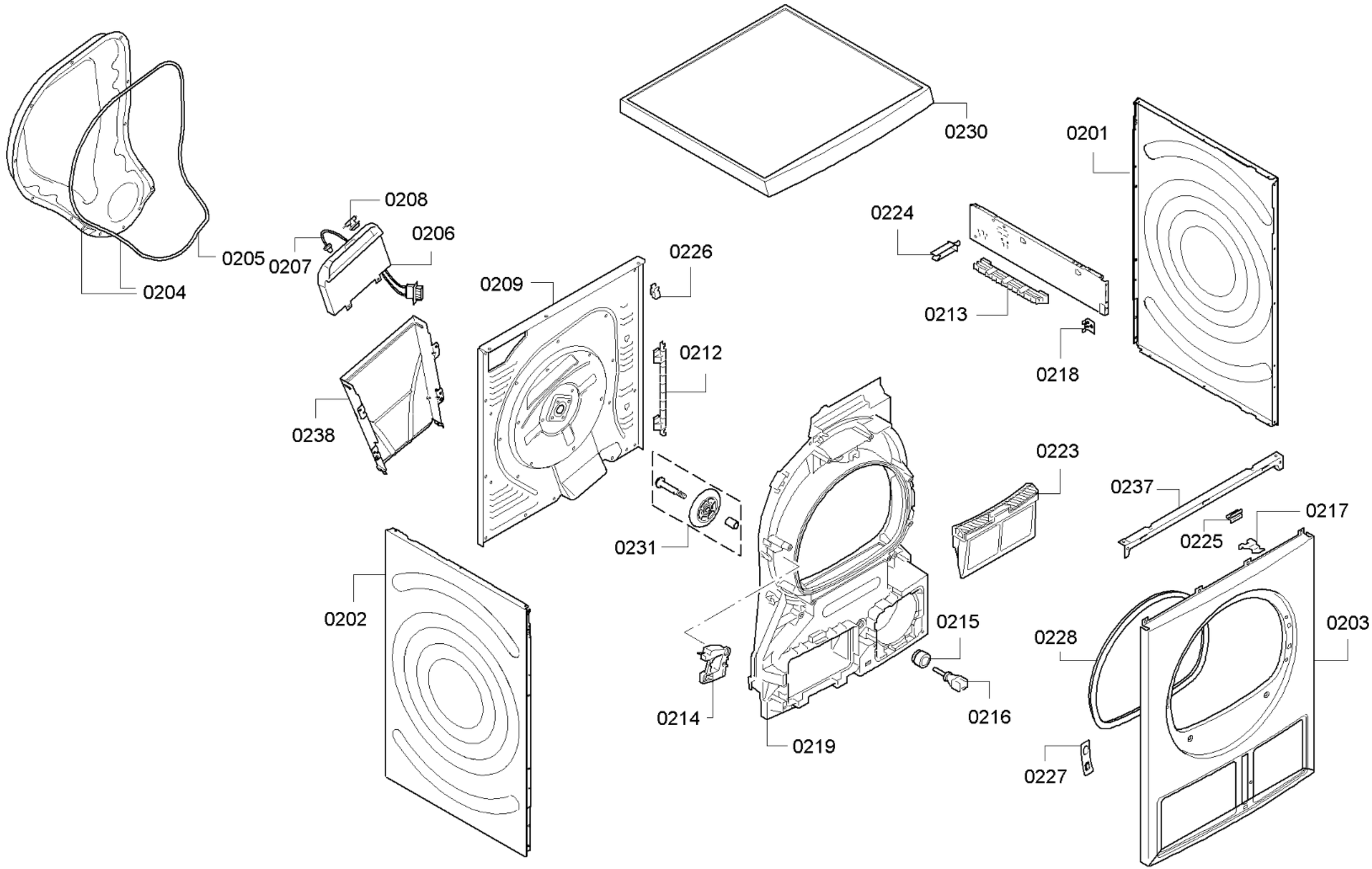

58300000158330 aet 000 a 2/5

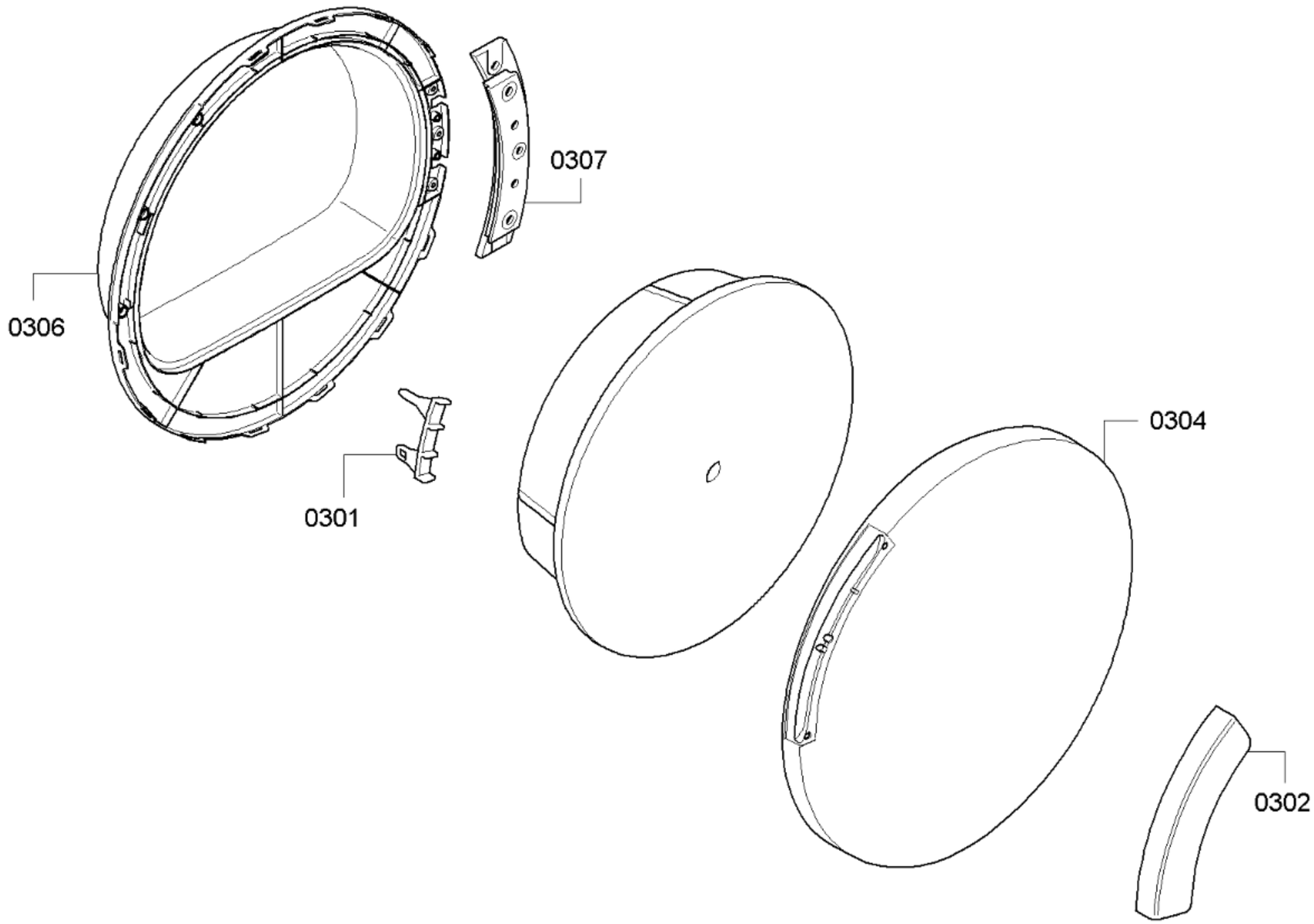
0307
0306
0301
0304
0302

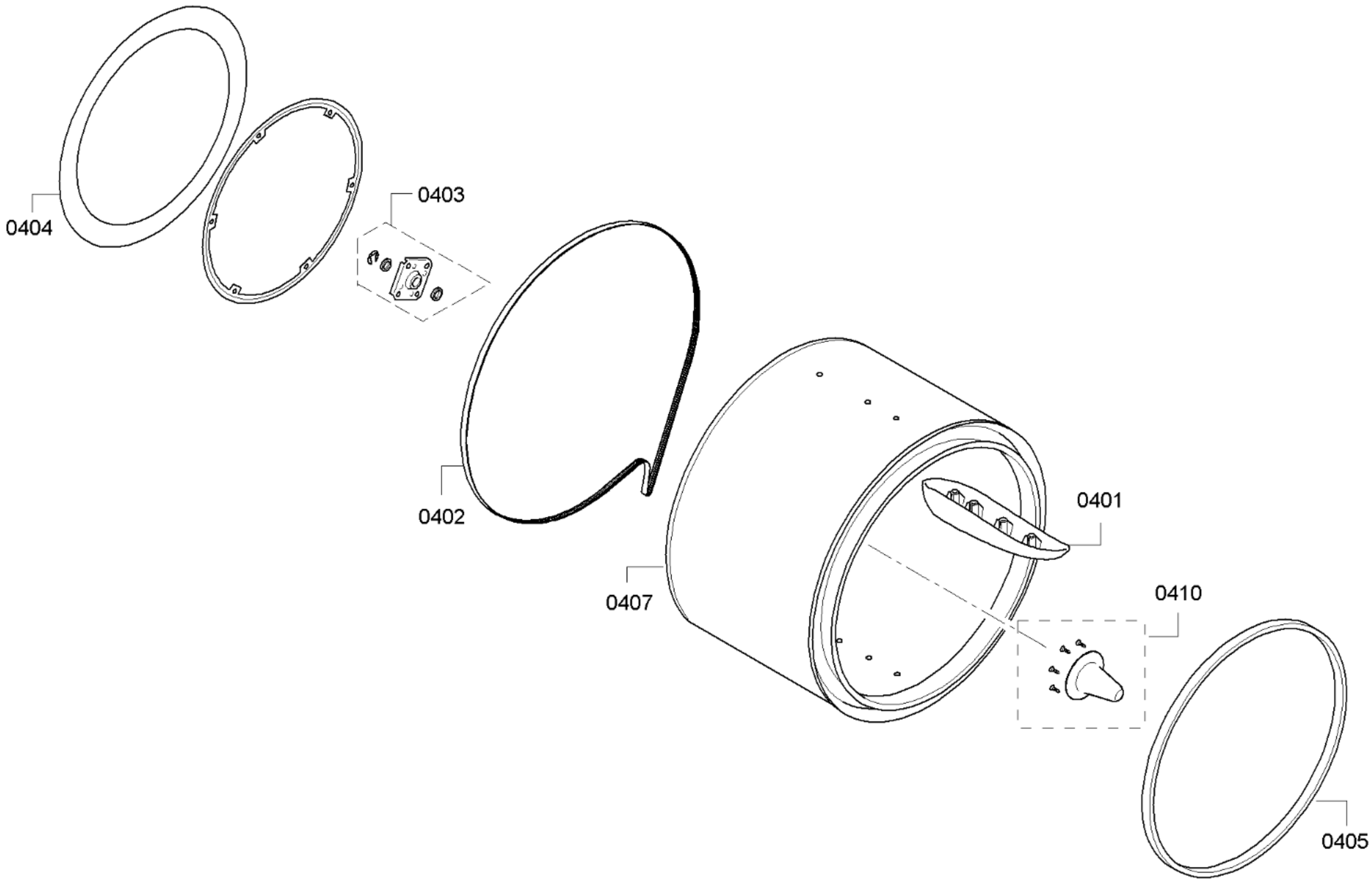

58300000158330 aet 000 a 4/5

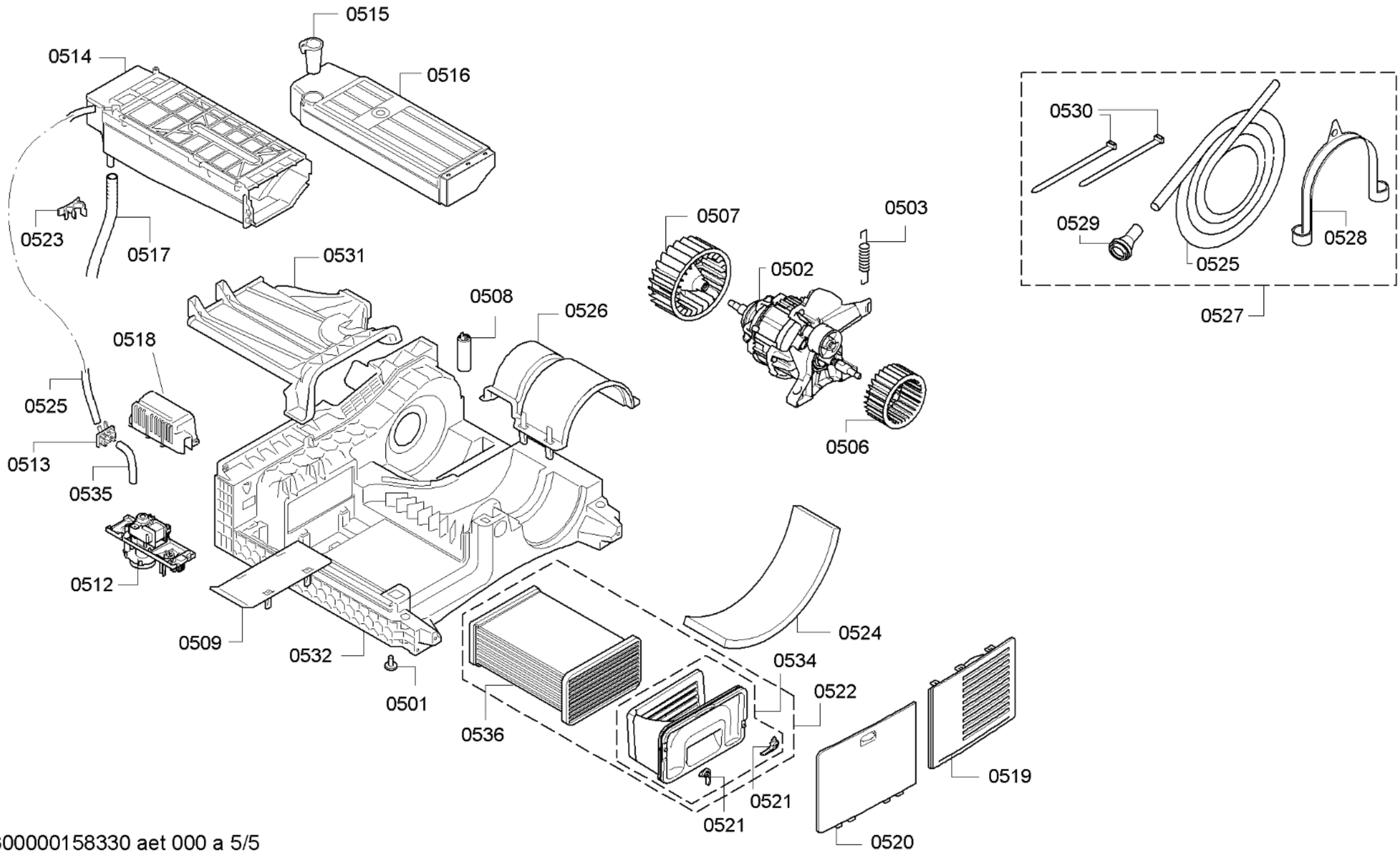

58300000158330 aet 000 a 5/5