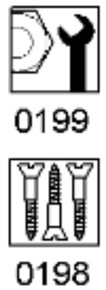
0199
0198

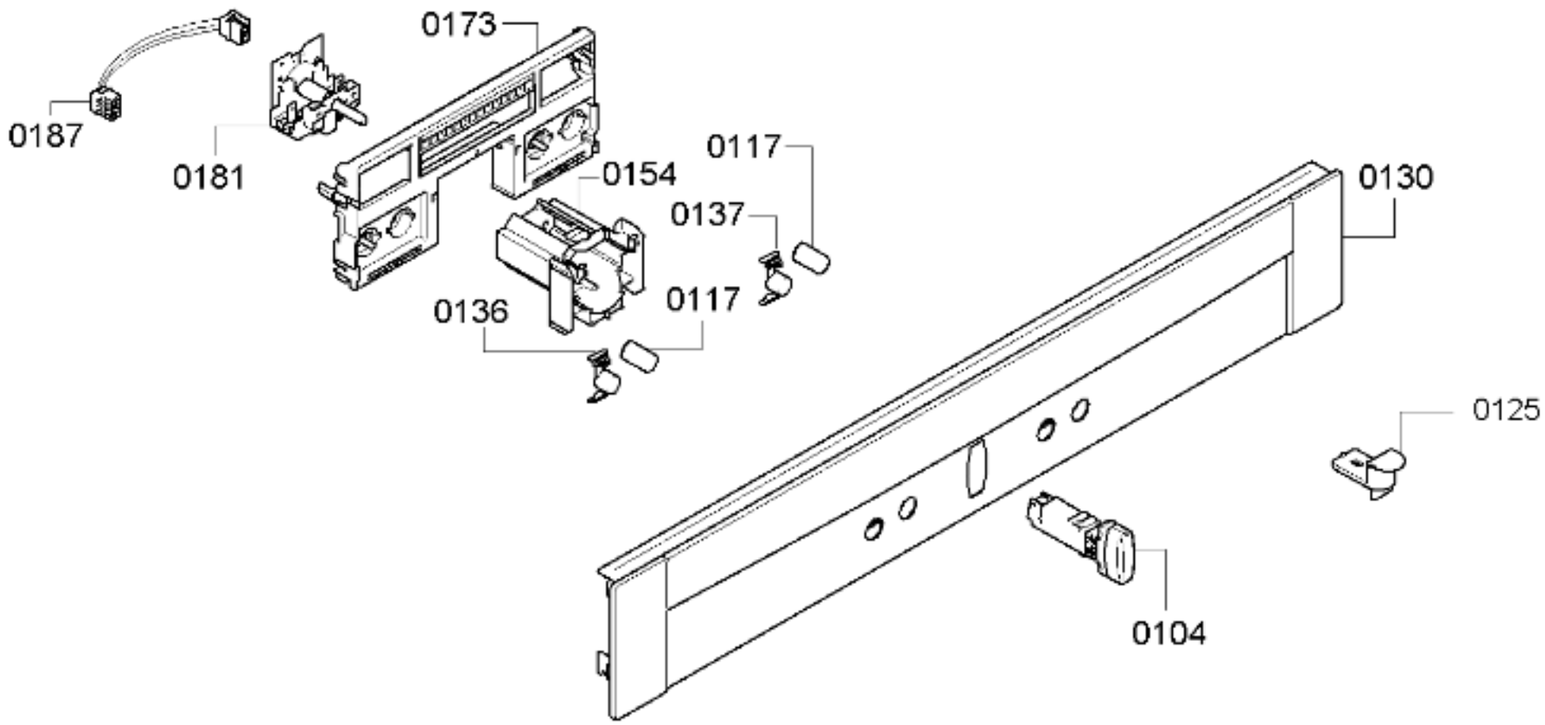
0173
0187
0181
0154
0117
0137
0130
0136
0117
0125
0104

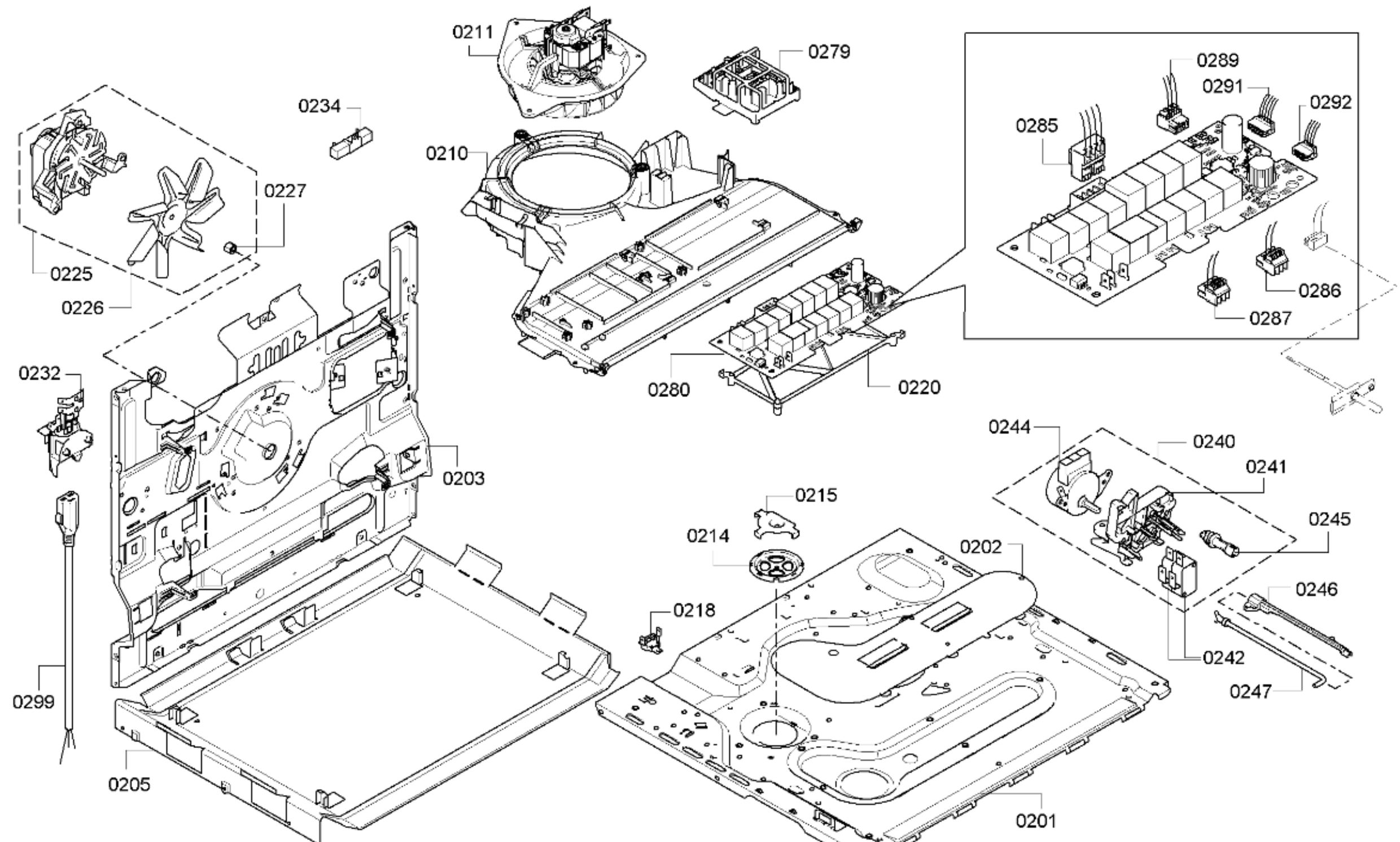

58300000154394 aet 000 a 2/6

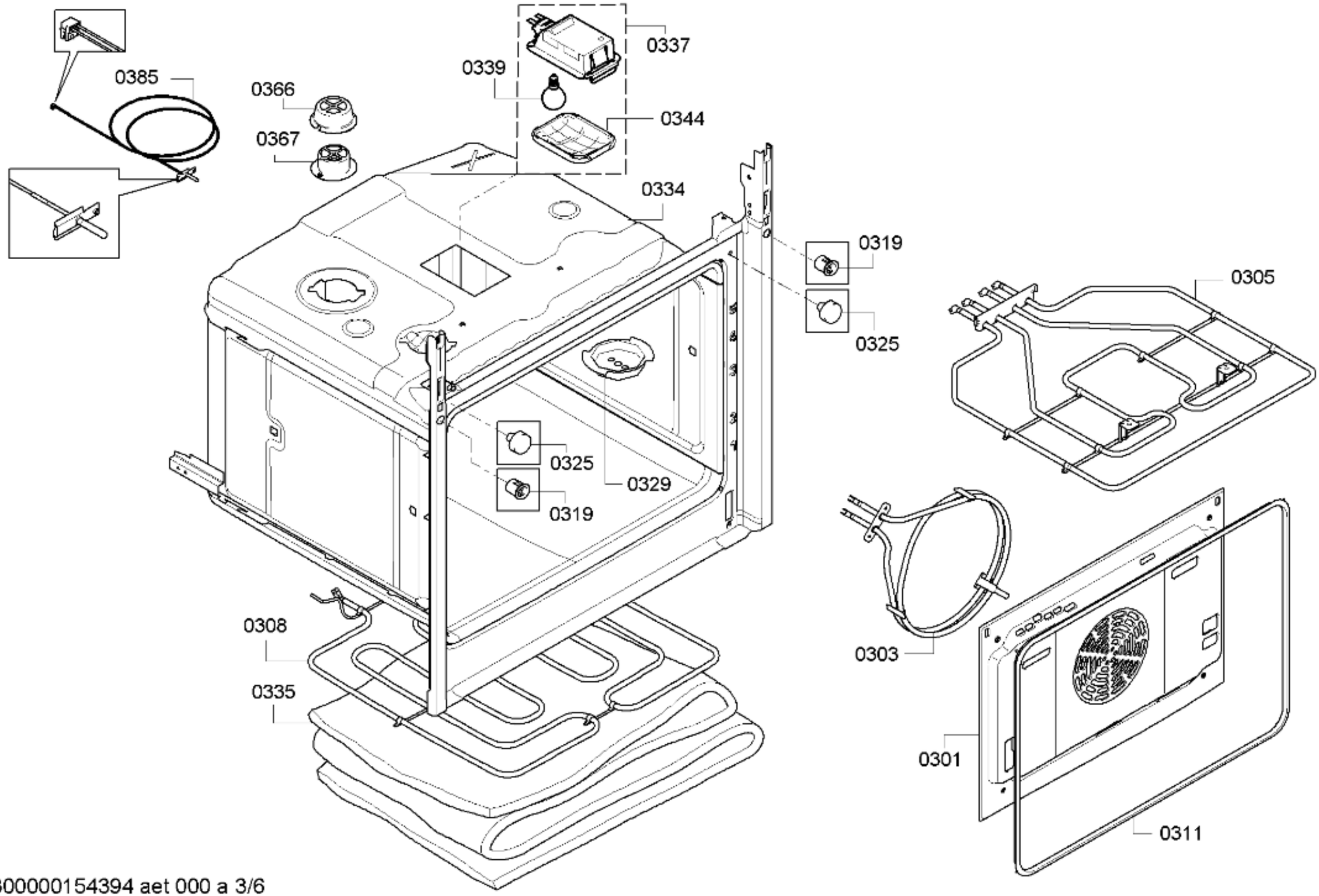

58300000154394 aet 000 a 3/6

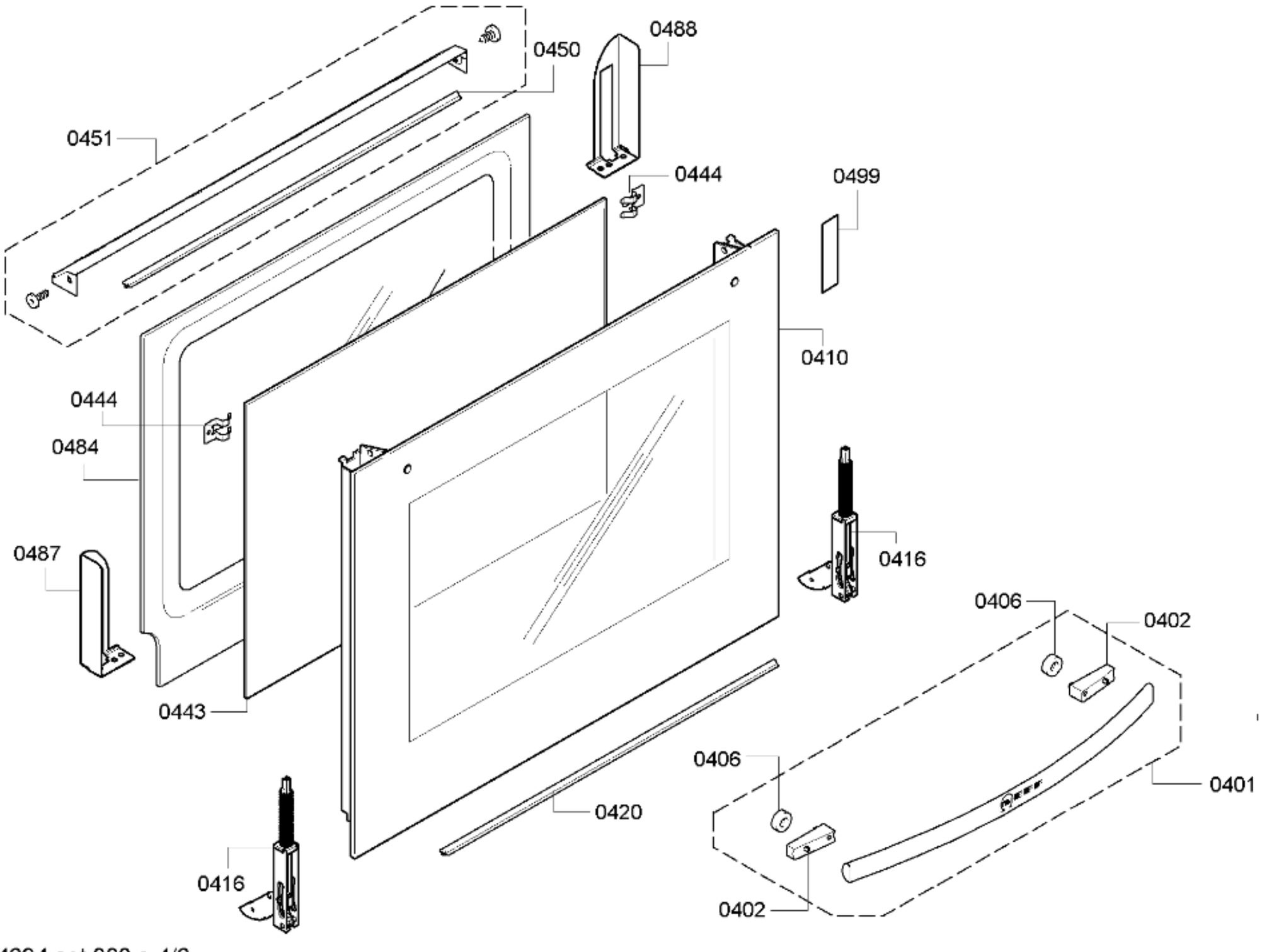

58300000154394 aet 000 a 4/6

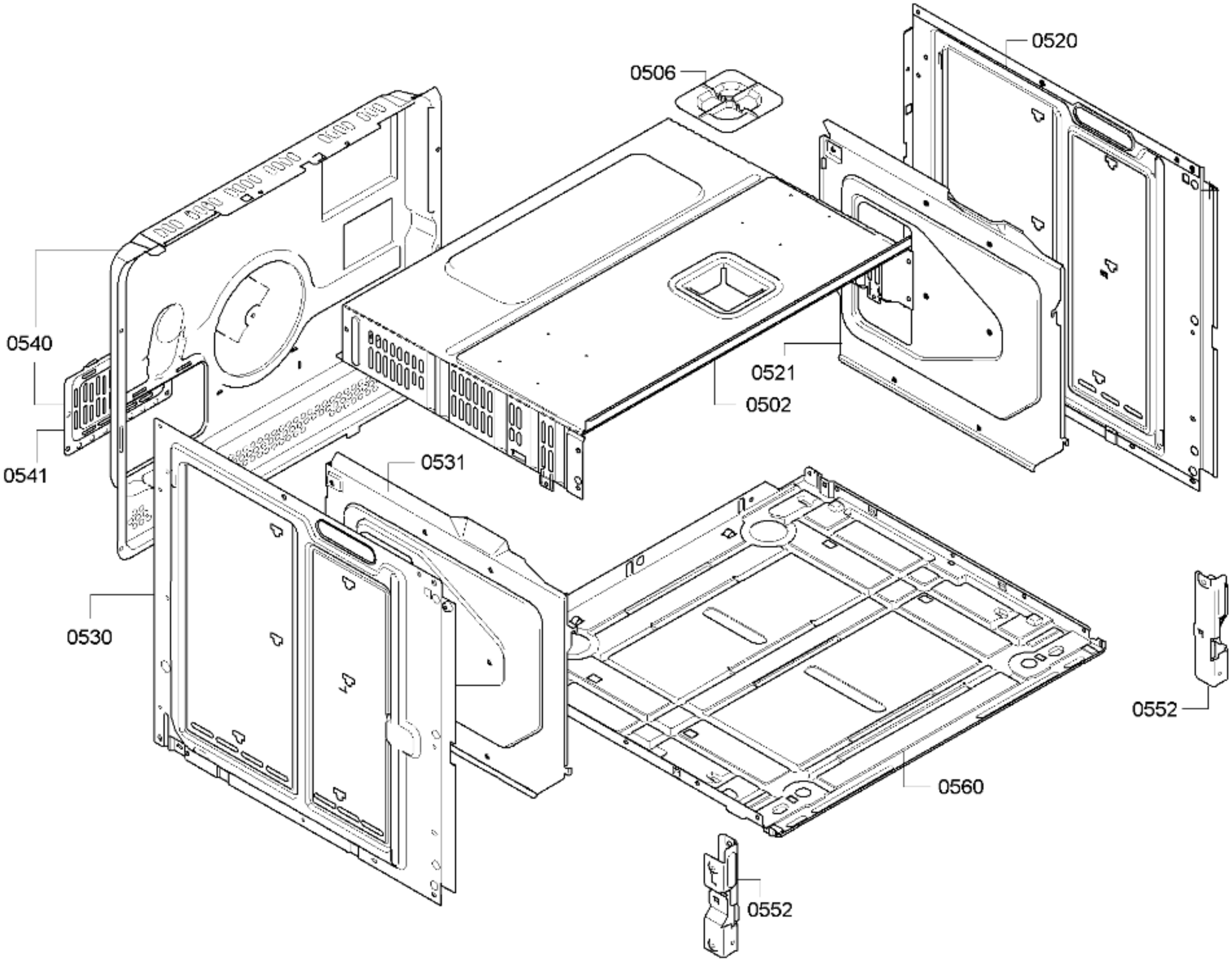

58300000154394 aet 000 a 5/6

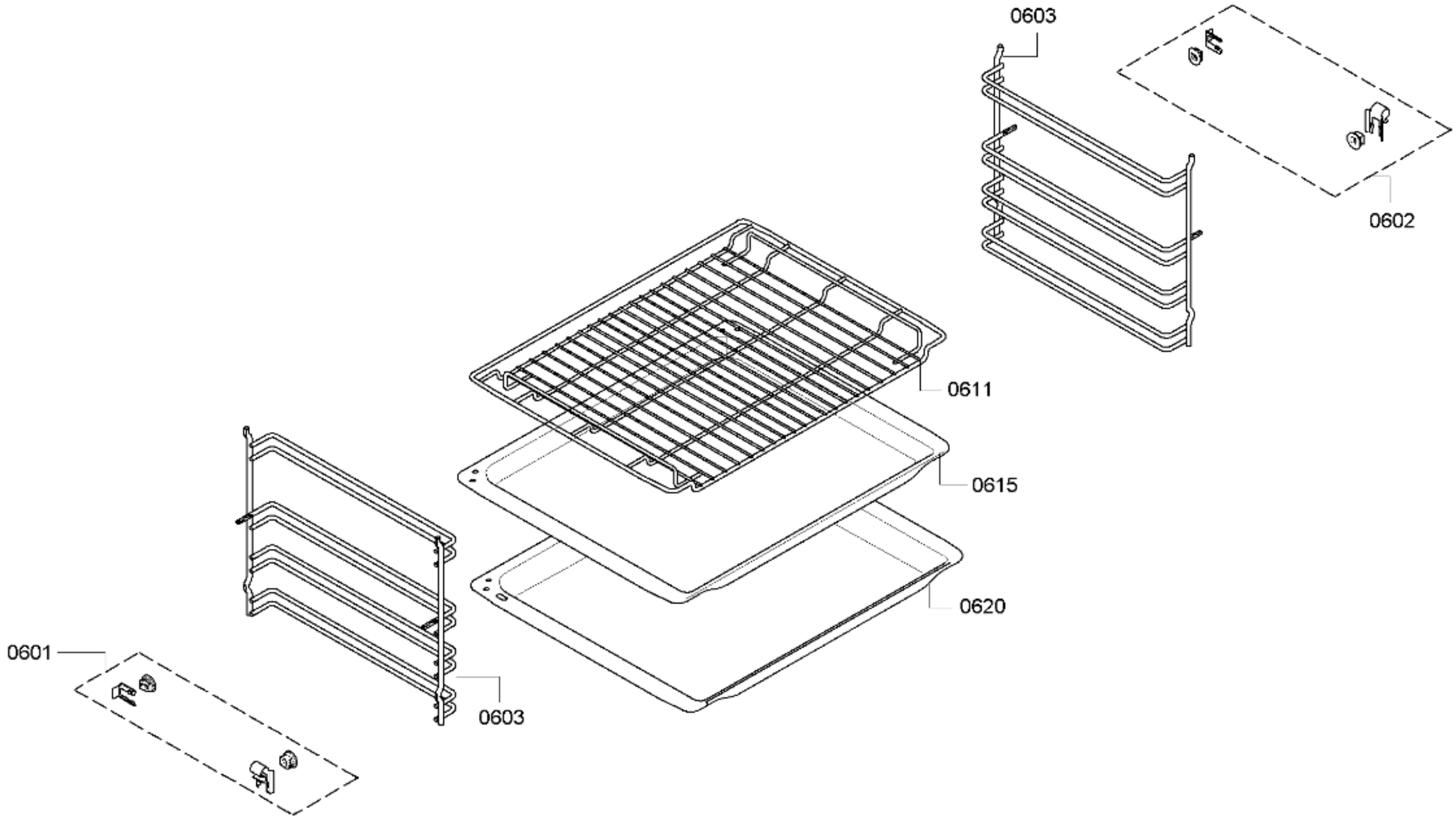

58300000154394 aet 000 a 6/6