0199

0198

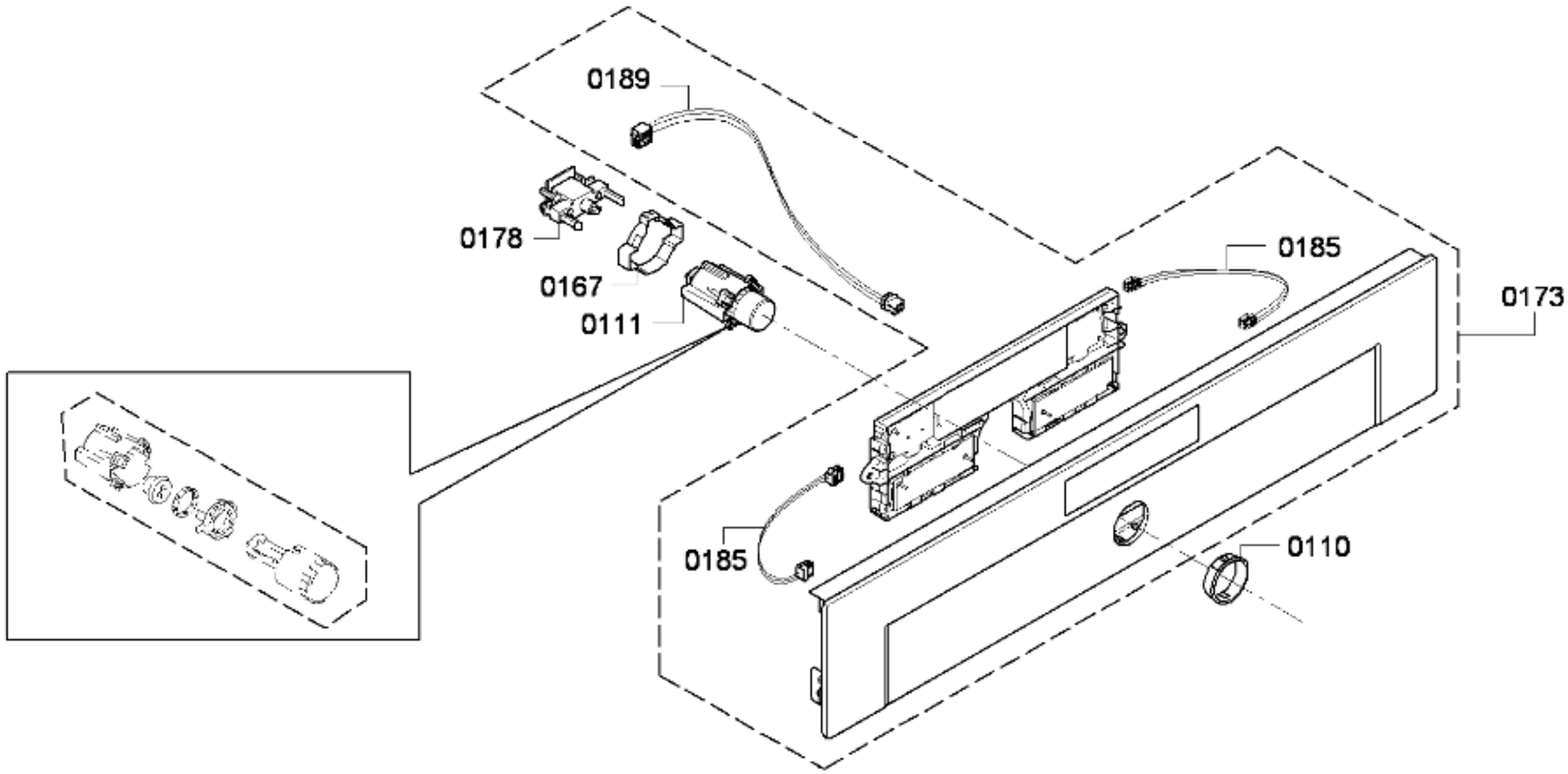

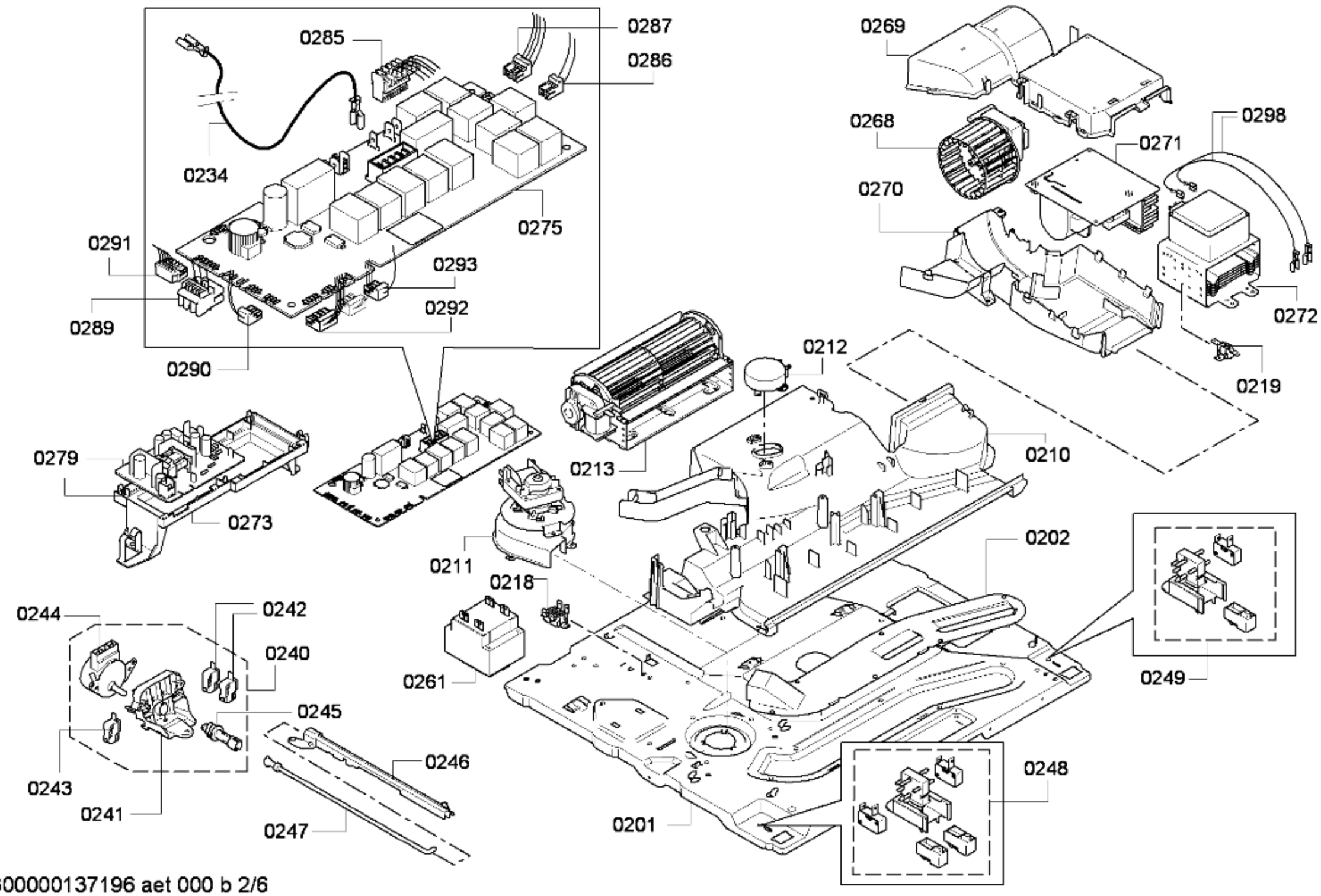

58300000137196 aet 000 b 2/6

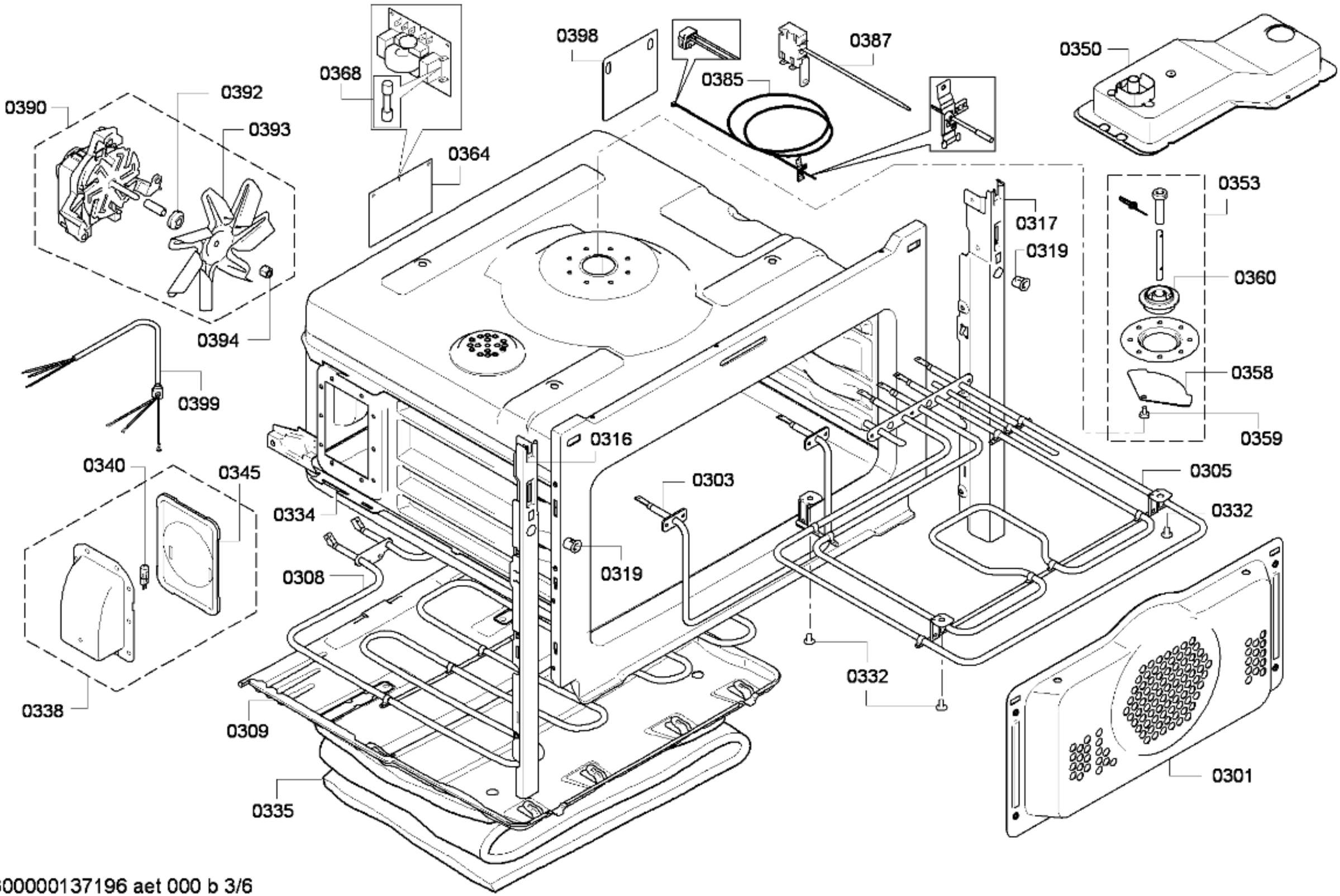

58300000137196 aet 000 b 3/6

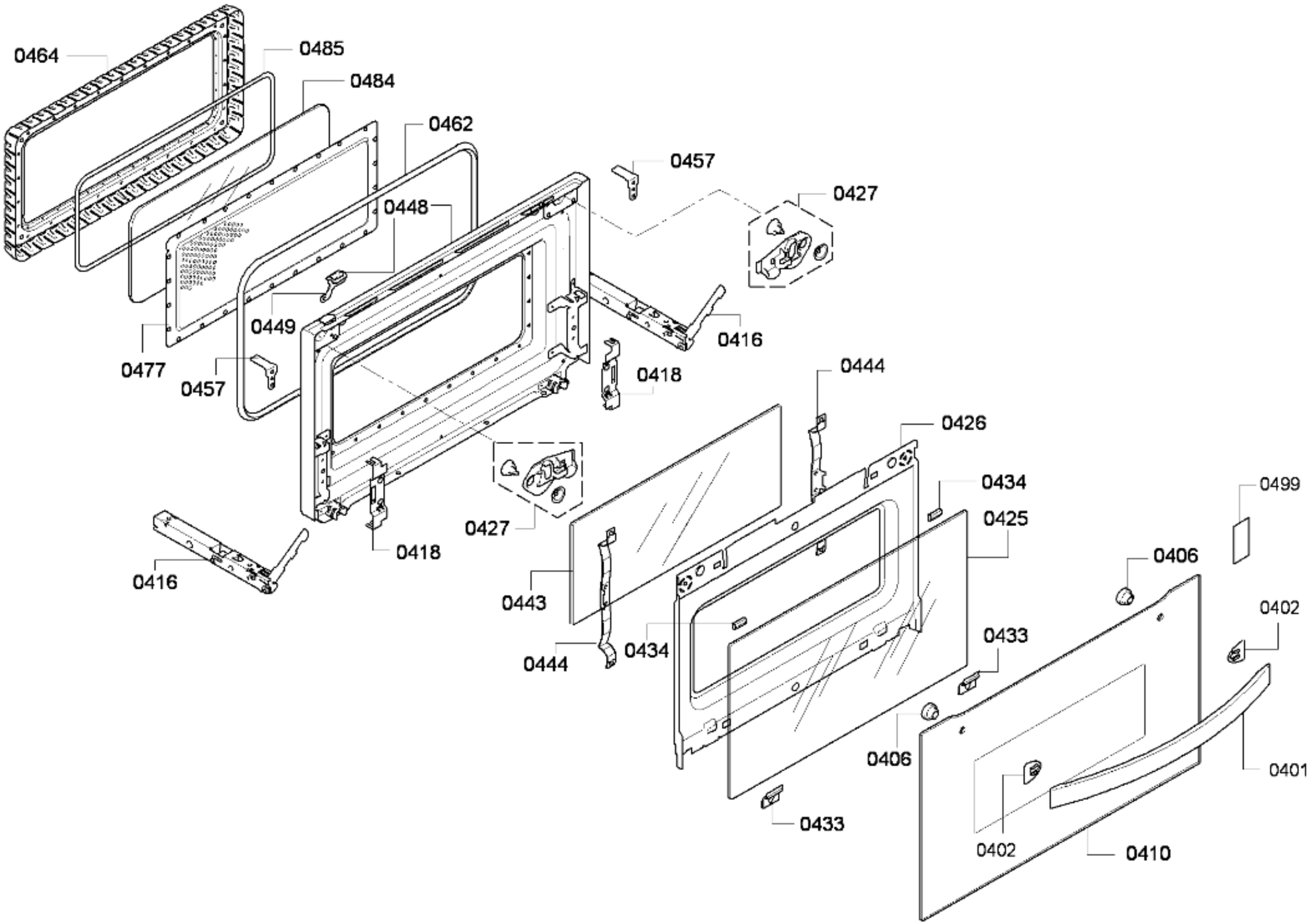

58300000137196 aet 000 b 4/6

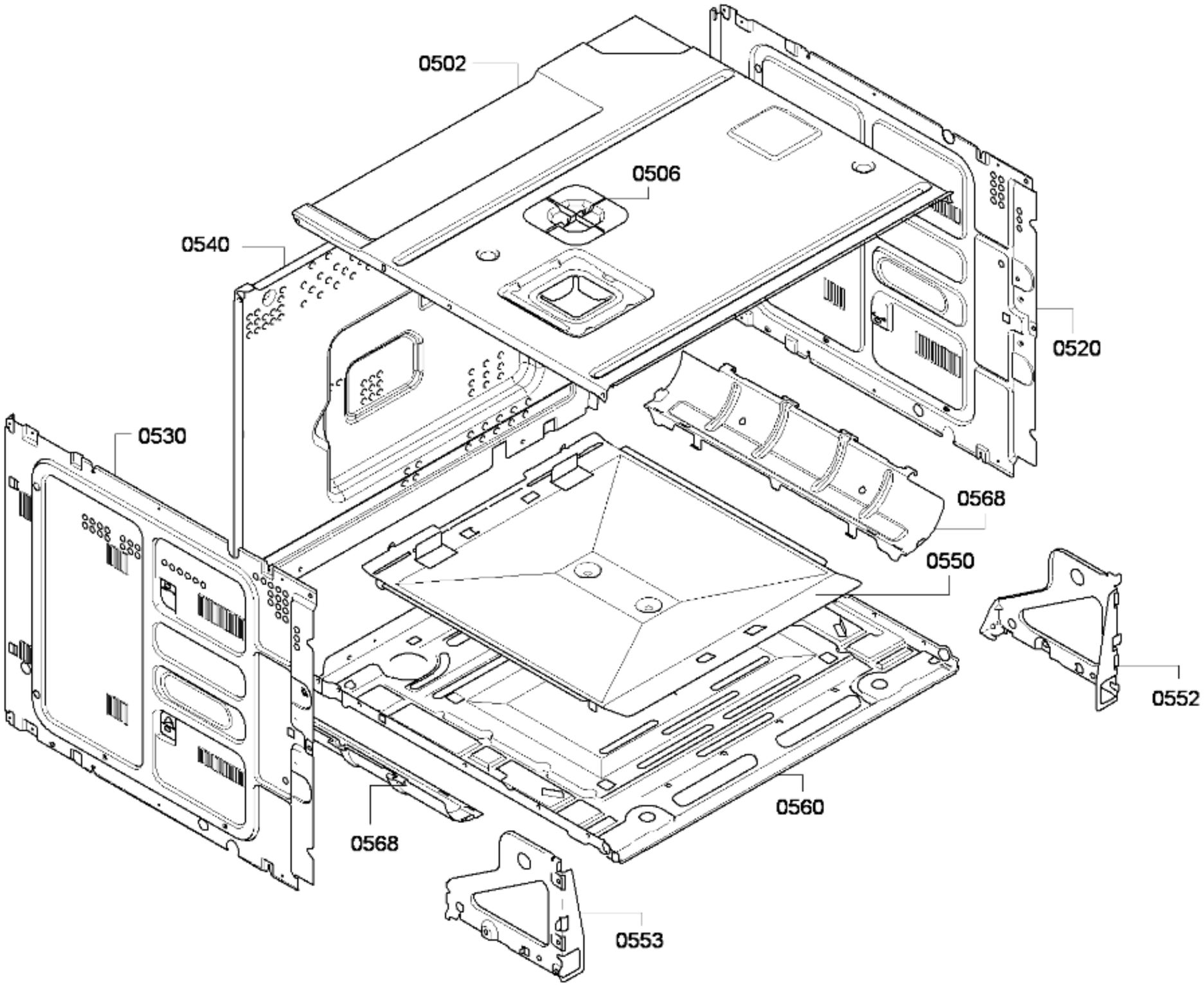

58300000137196 aet 000 b 5/6

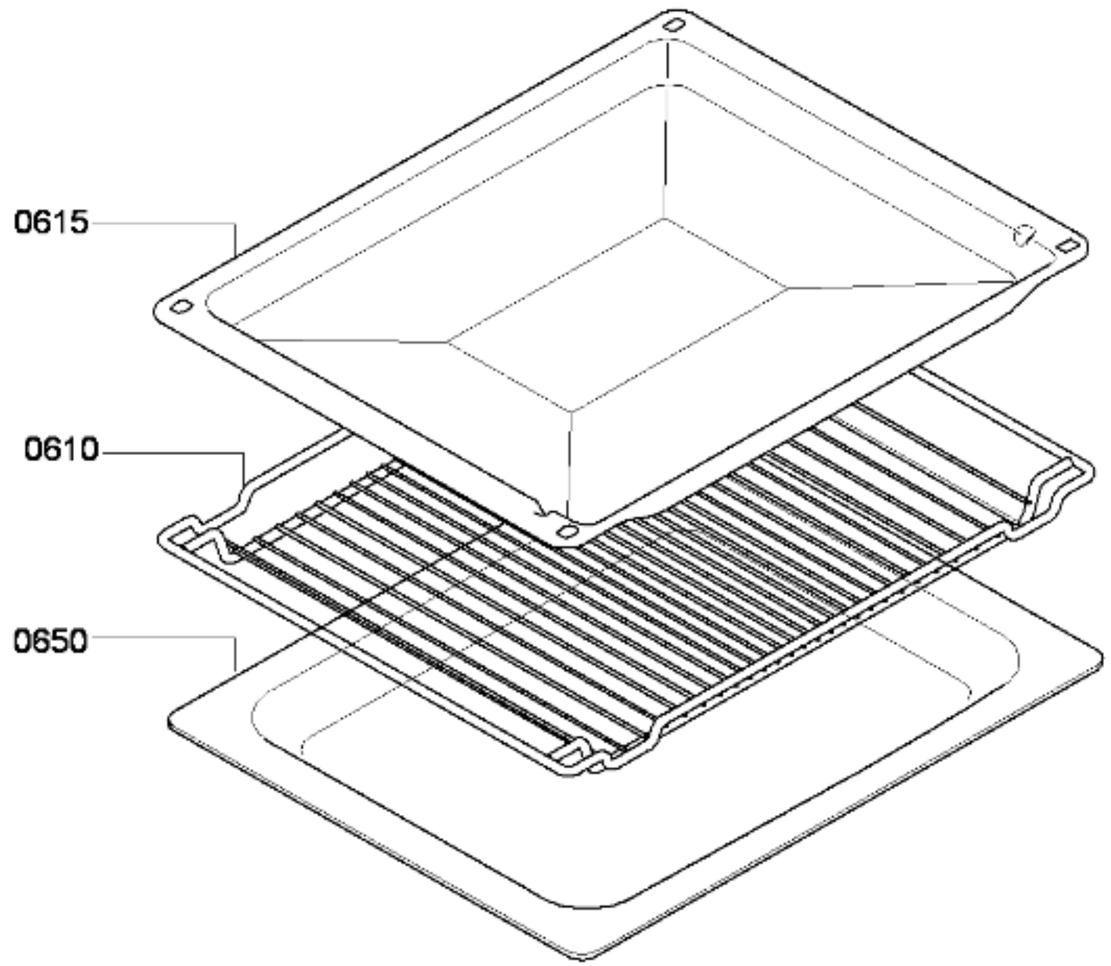
0615
0610
0650