0199

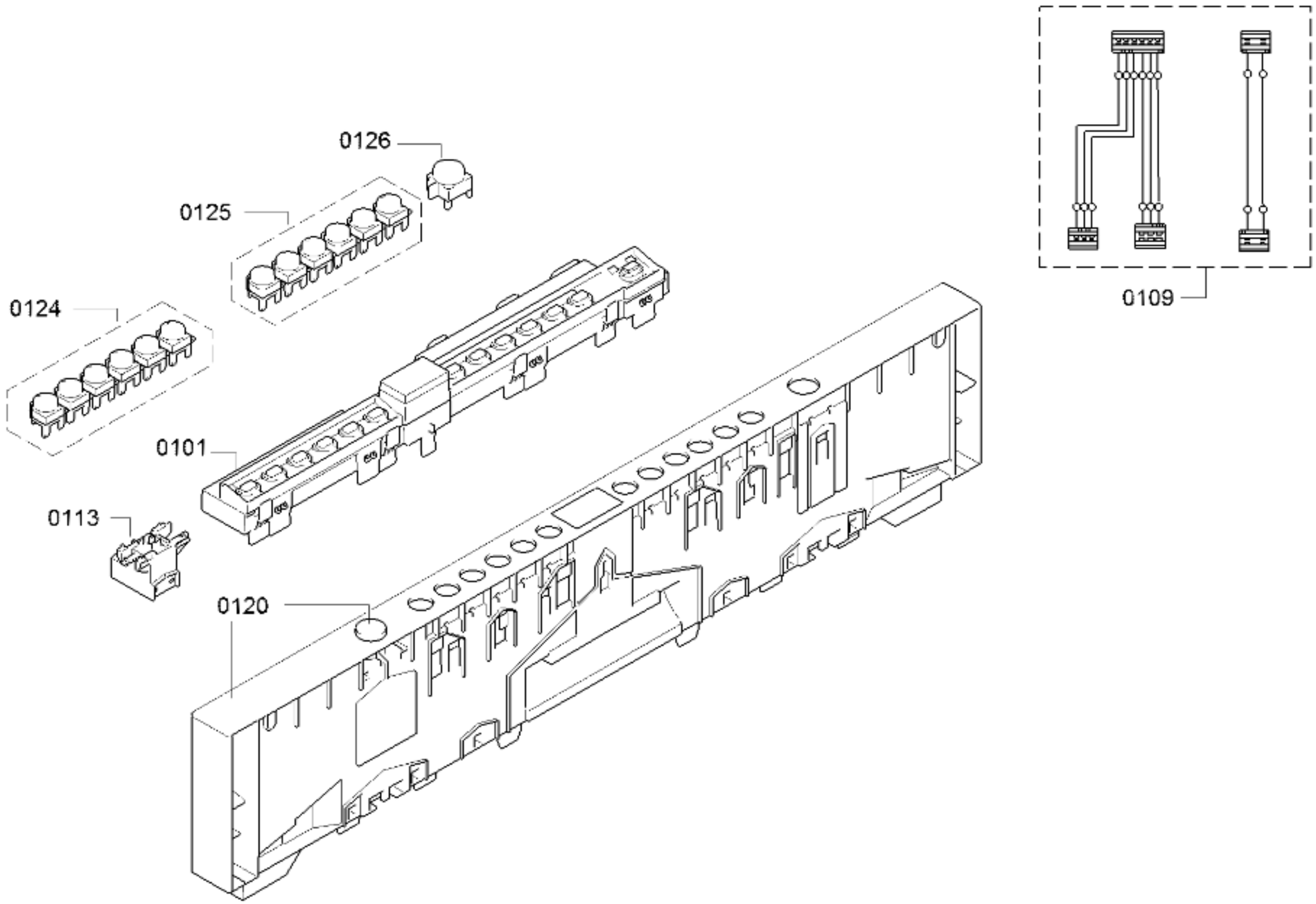

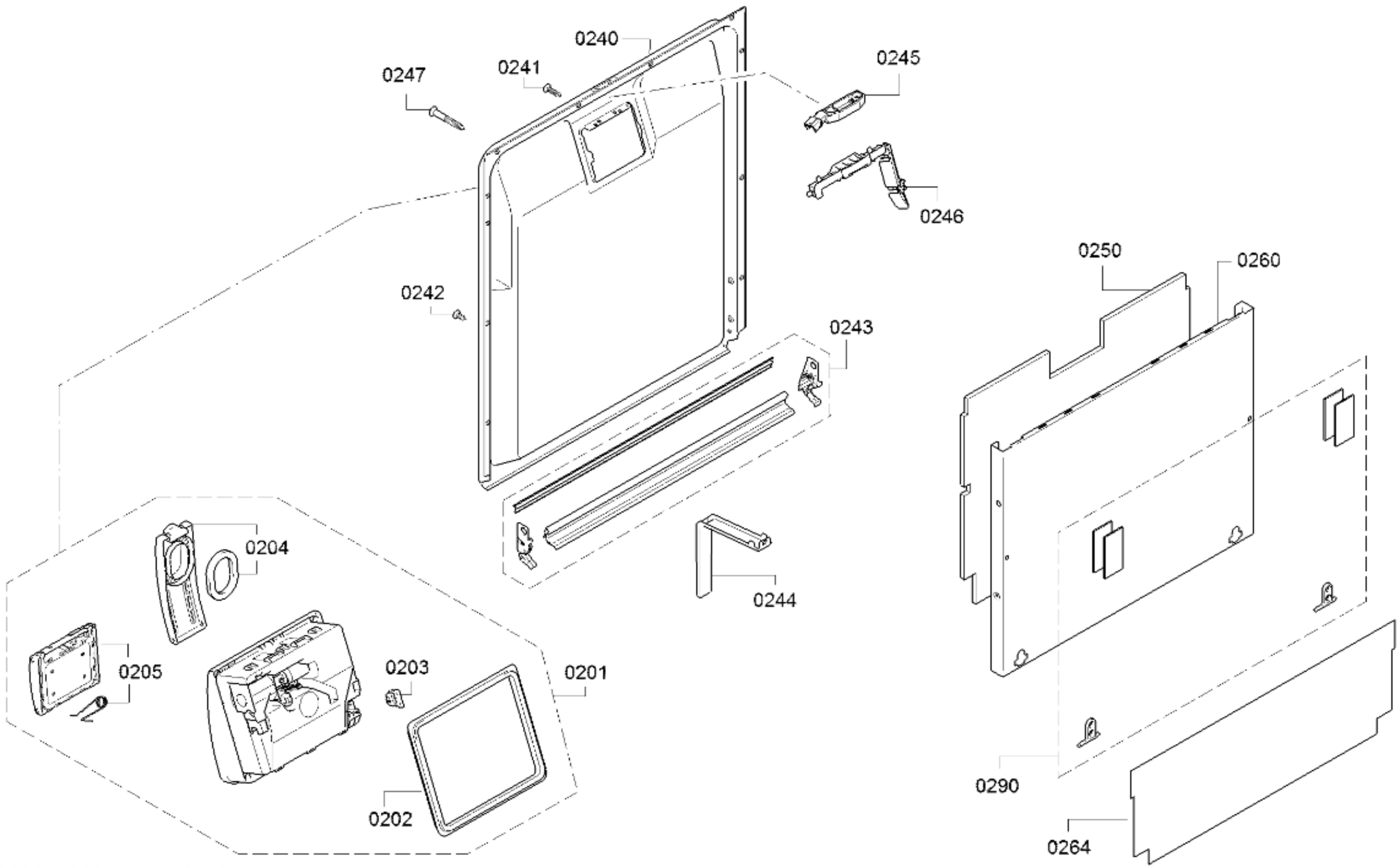

58300000186665 aet 000 c 2/6

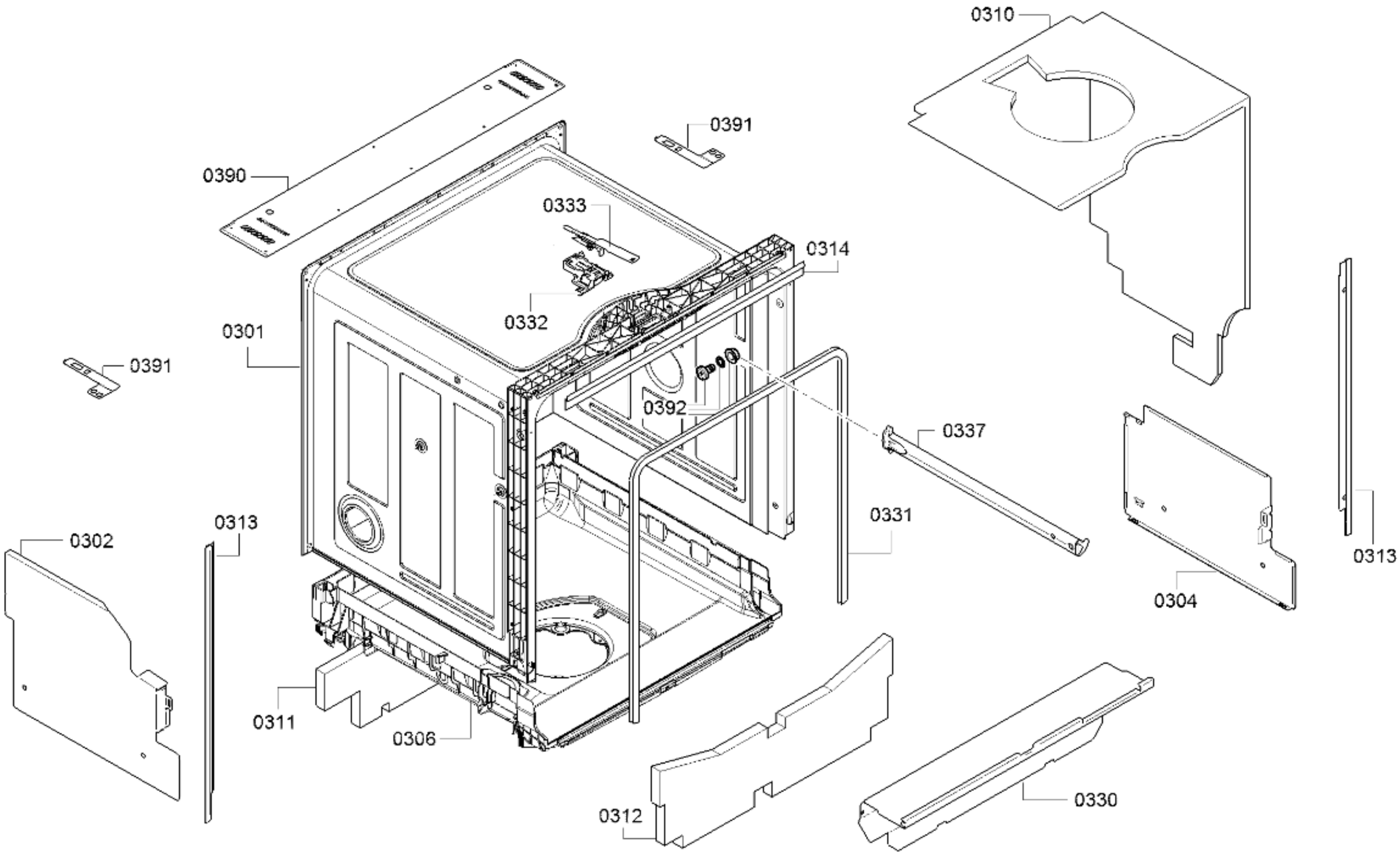

58300000186665 aet 000 c 3/6

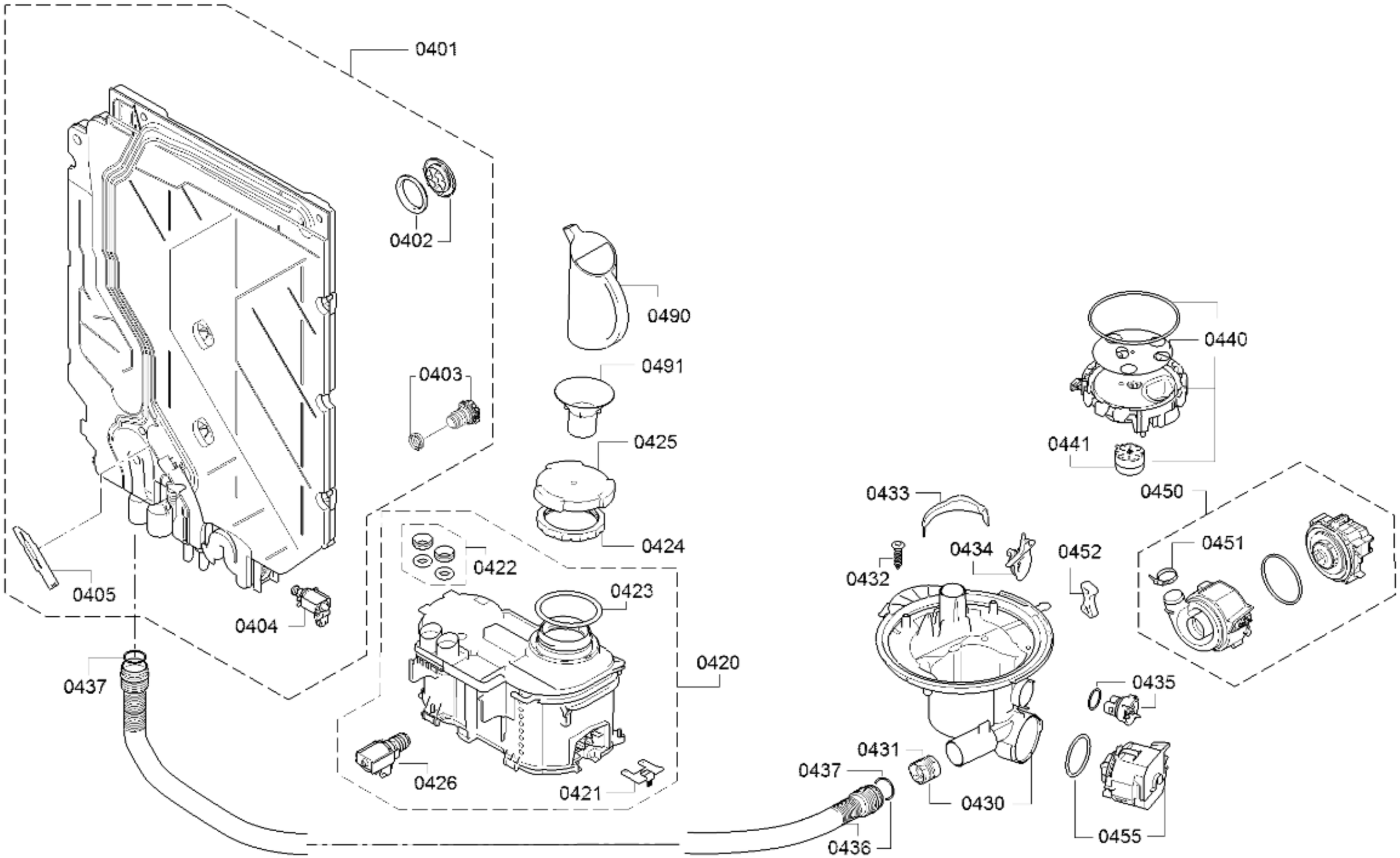

58300000186665 aet 000 c 4/6

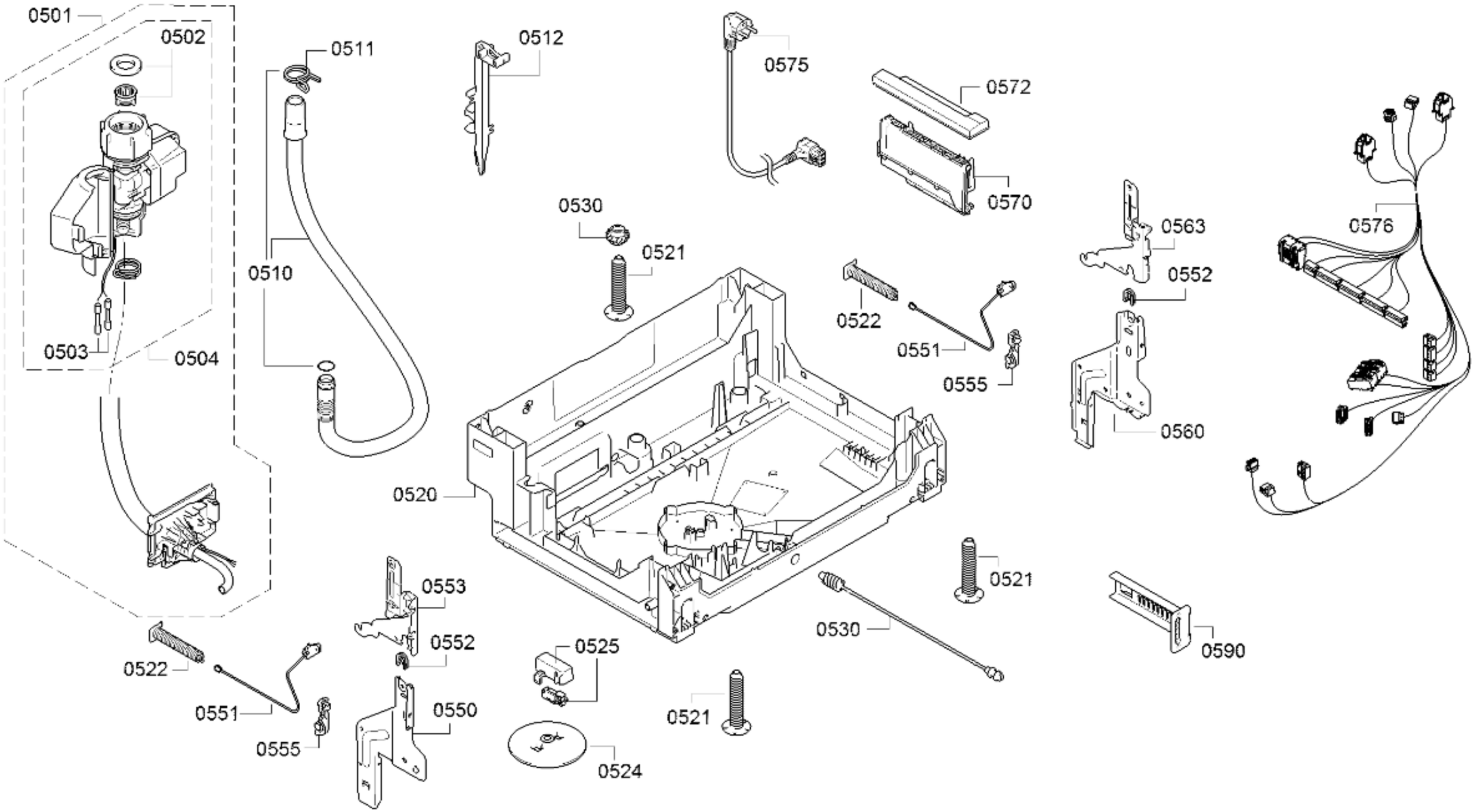

58300000186665 aet 000 c 5/6

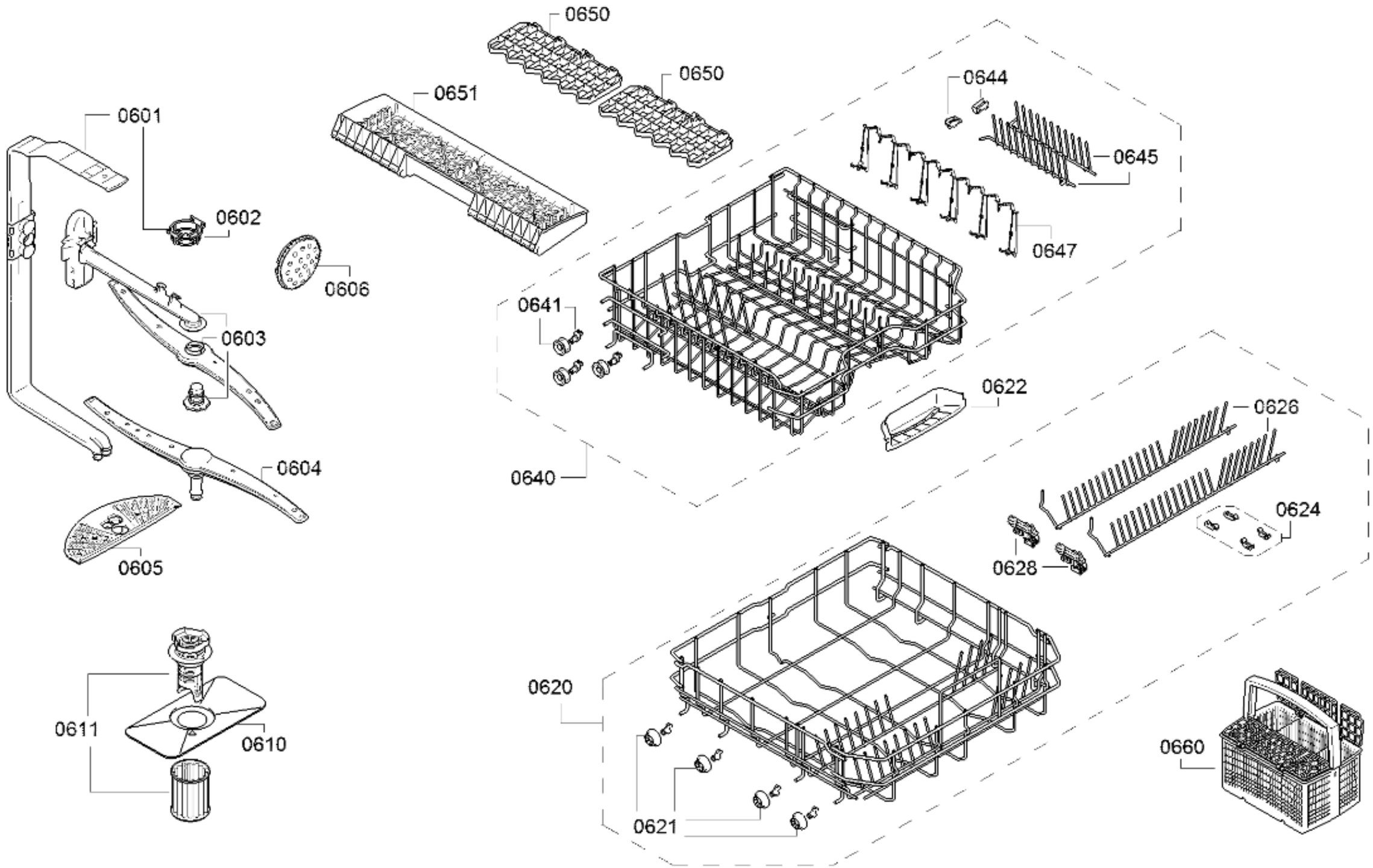

58300000186665 aet 000 c 6/6