0199

0198

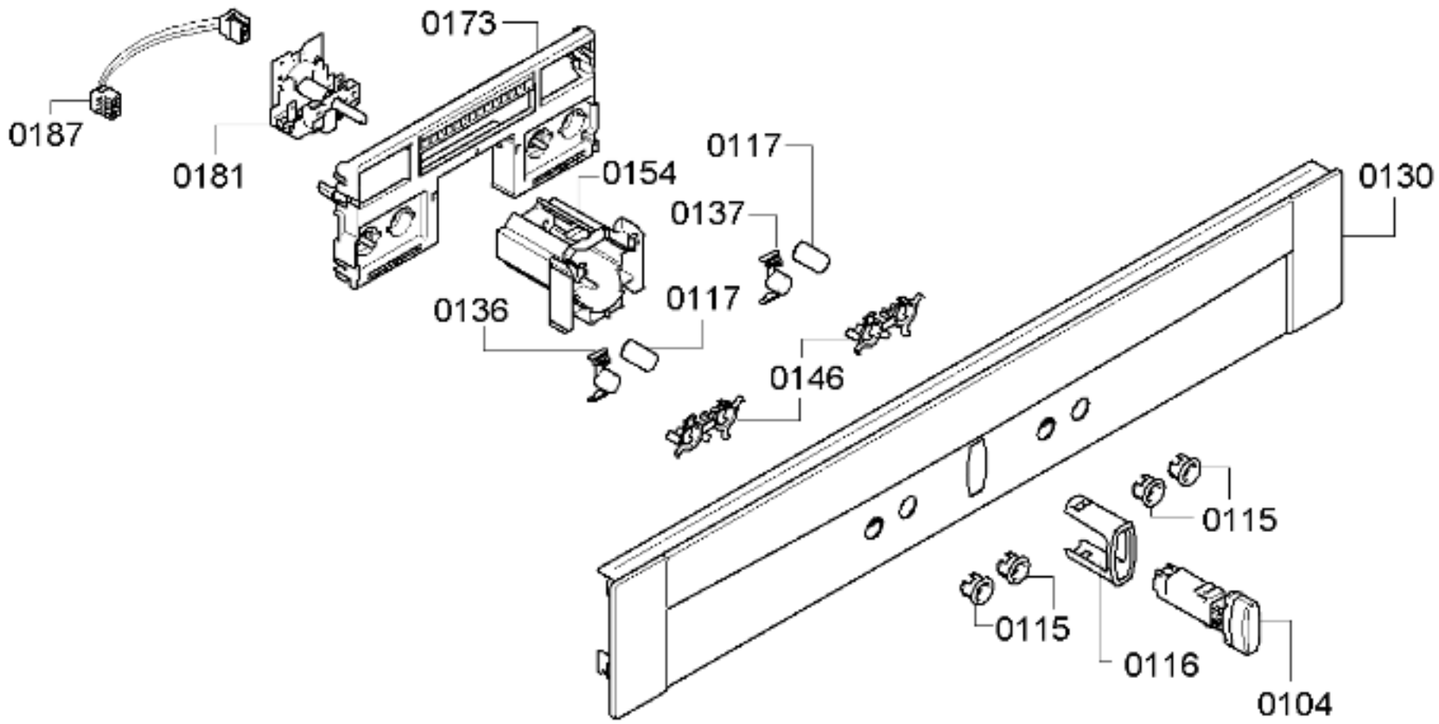
0173
0187
0181
0154
0117
0137
0130
0136
0117
0146
0115
0115
0116
0104

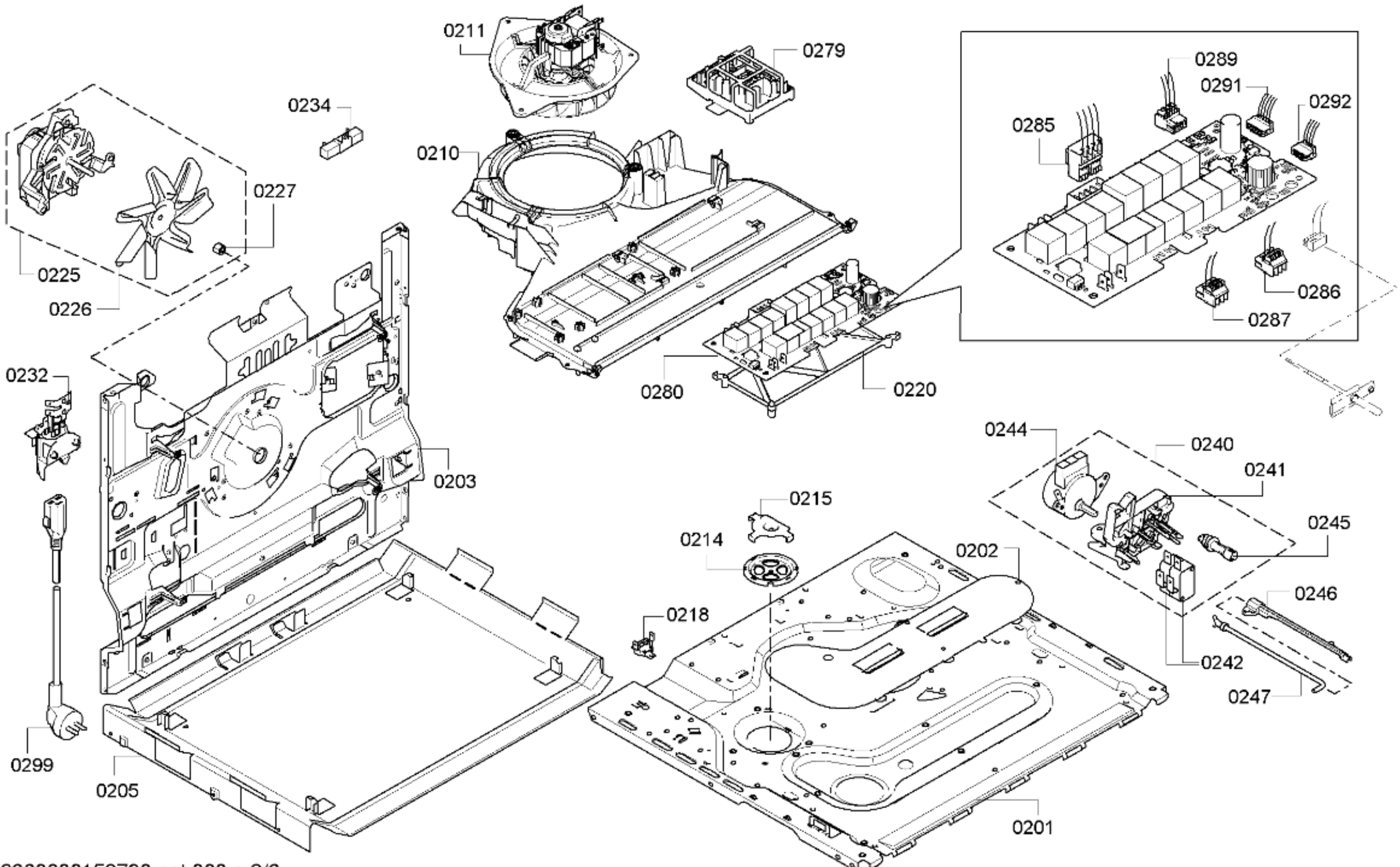


58300000152790 aet 000 a 2/6

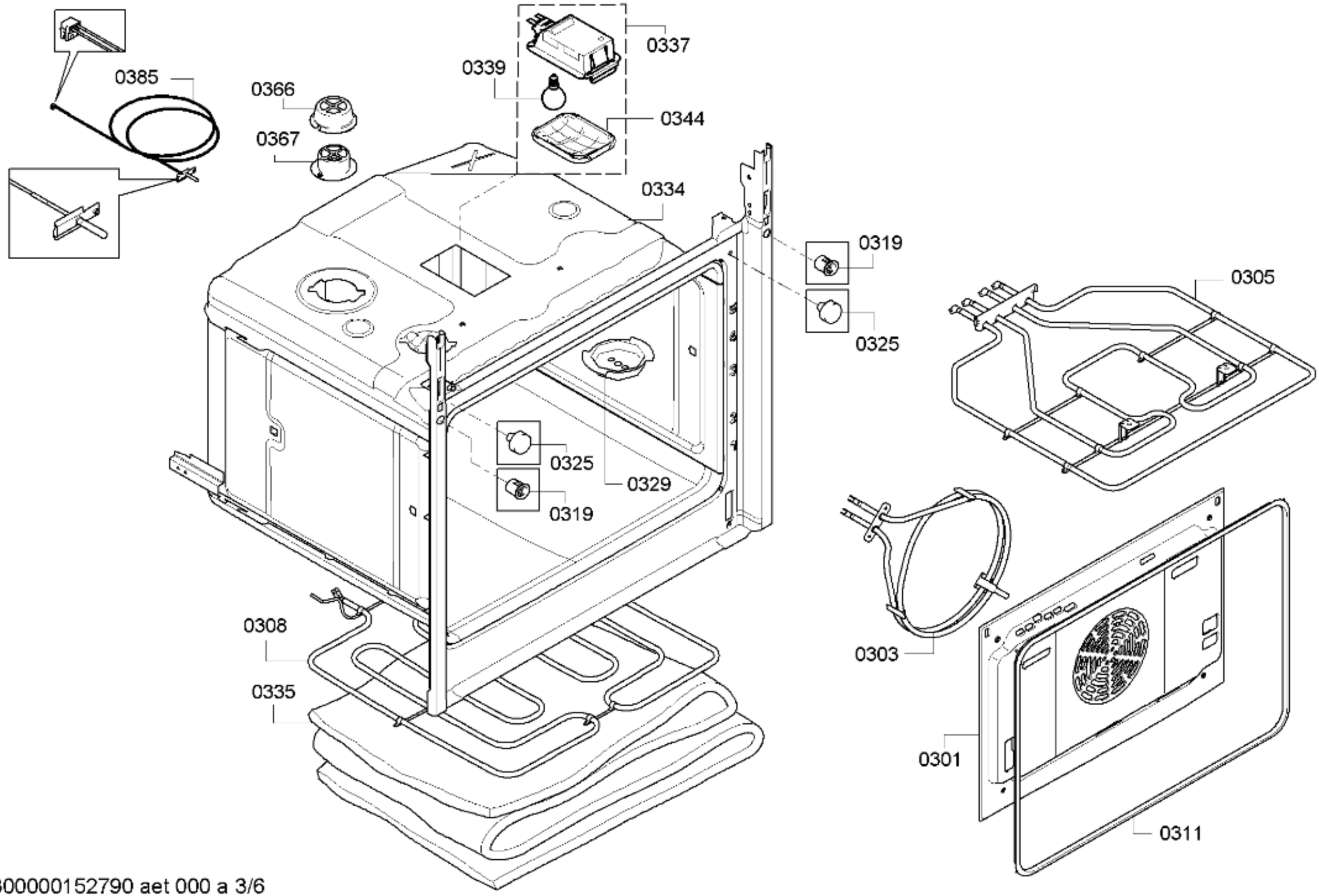


58300000152790 aet 000 a 3/6

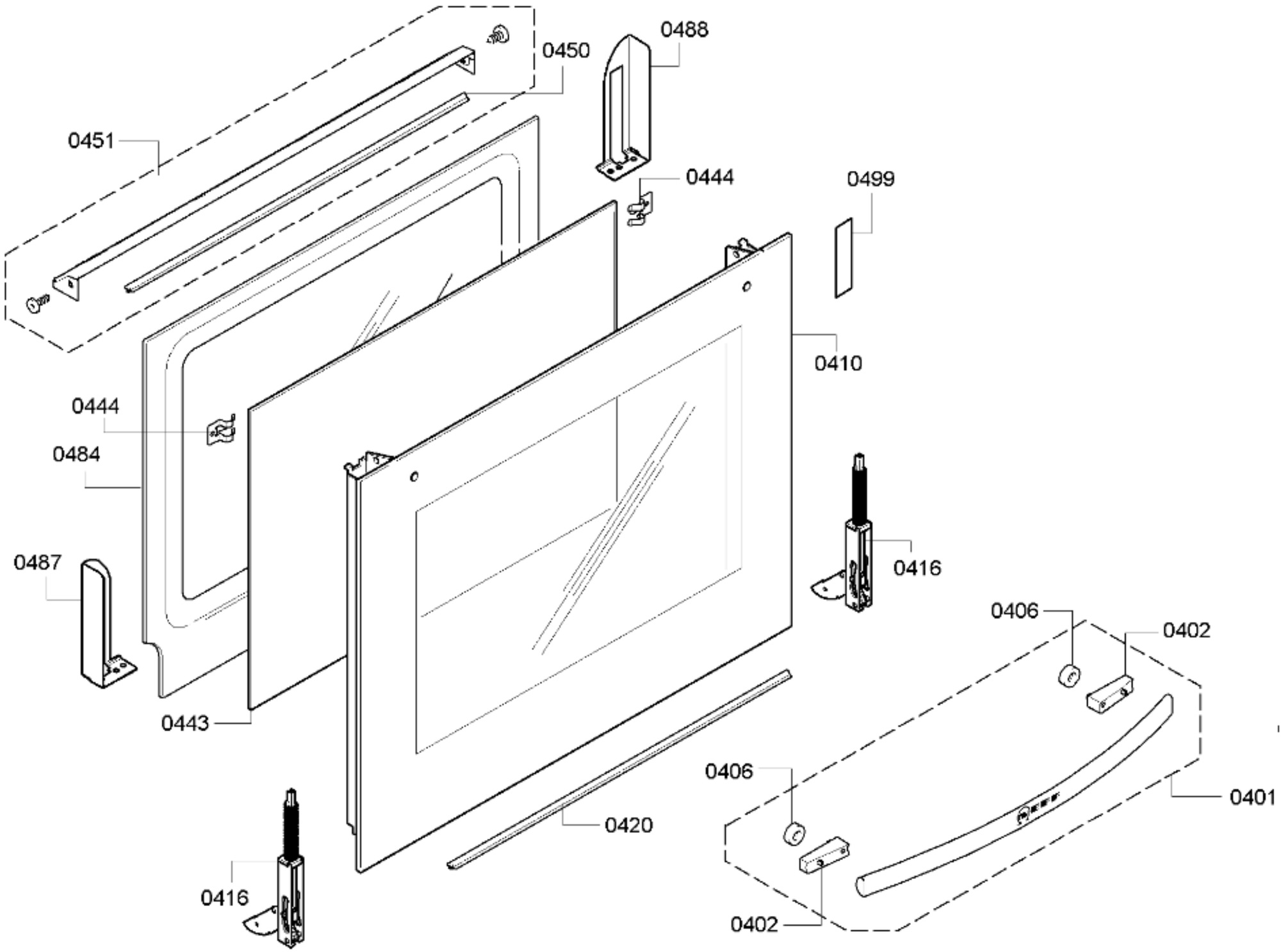


58300000152790 aet 000 a 4/6

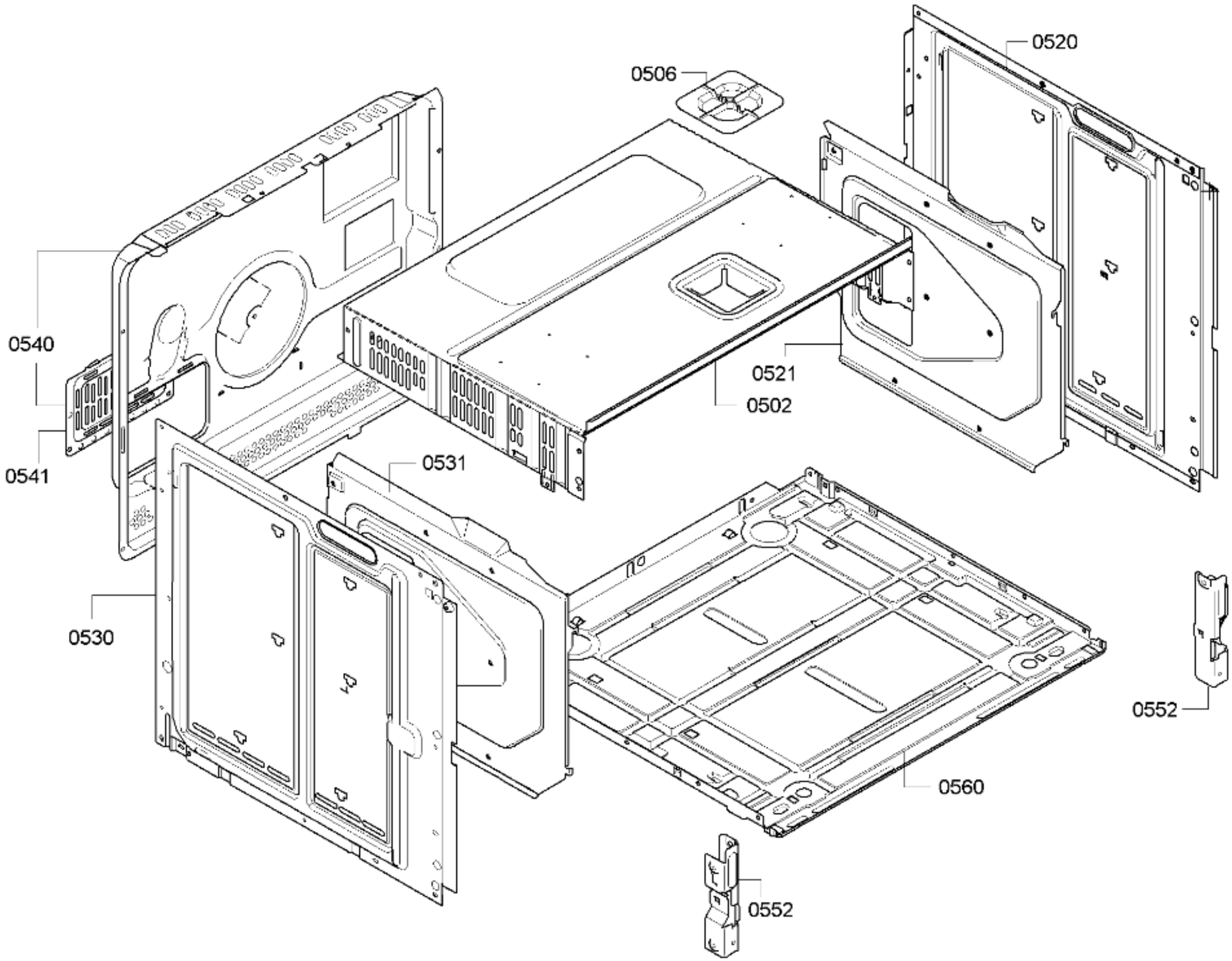


58300000152790 aet 000 a 5/6

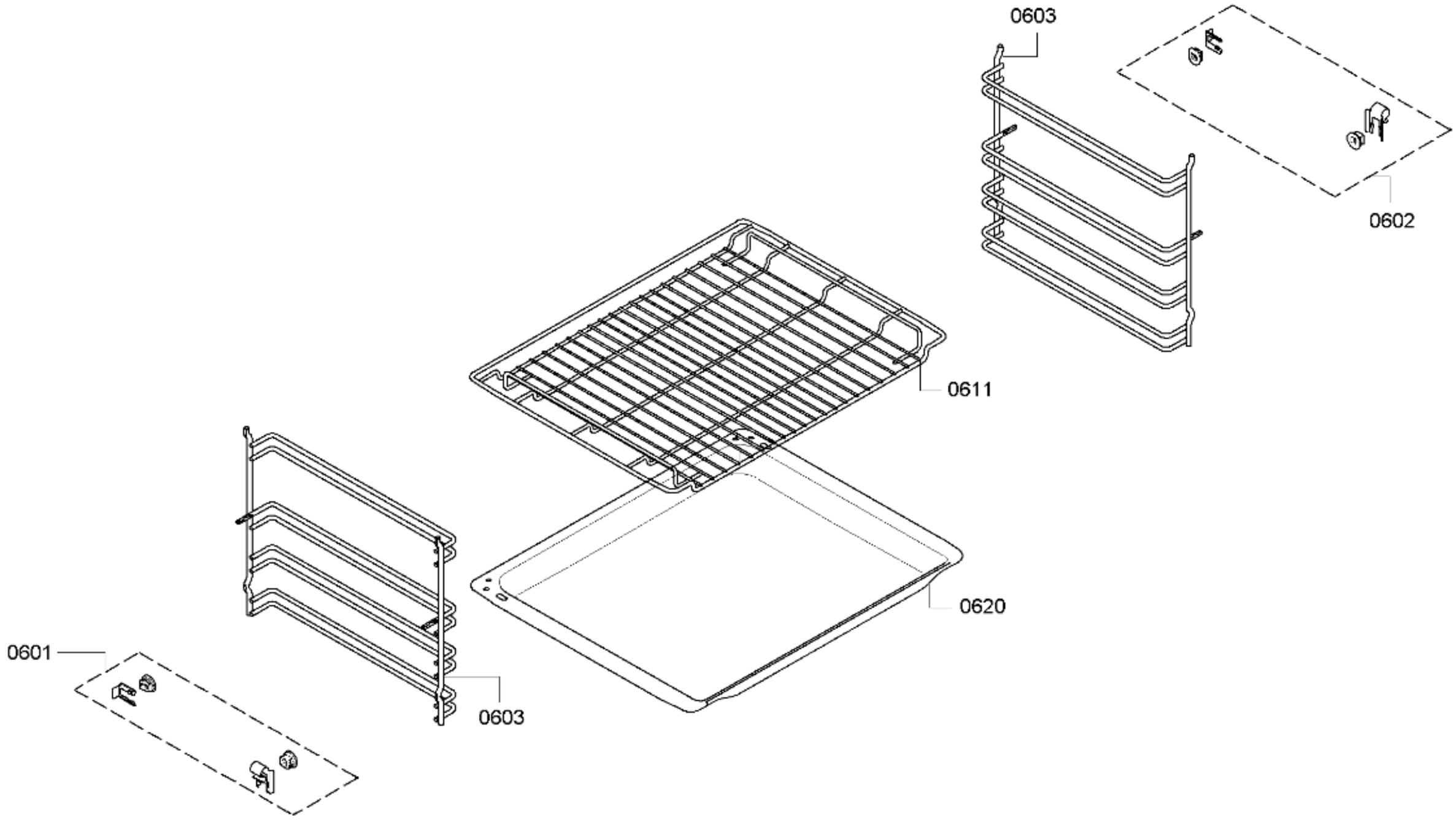


58300000152790 aet 000 a 6/6