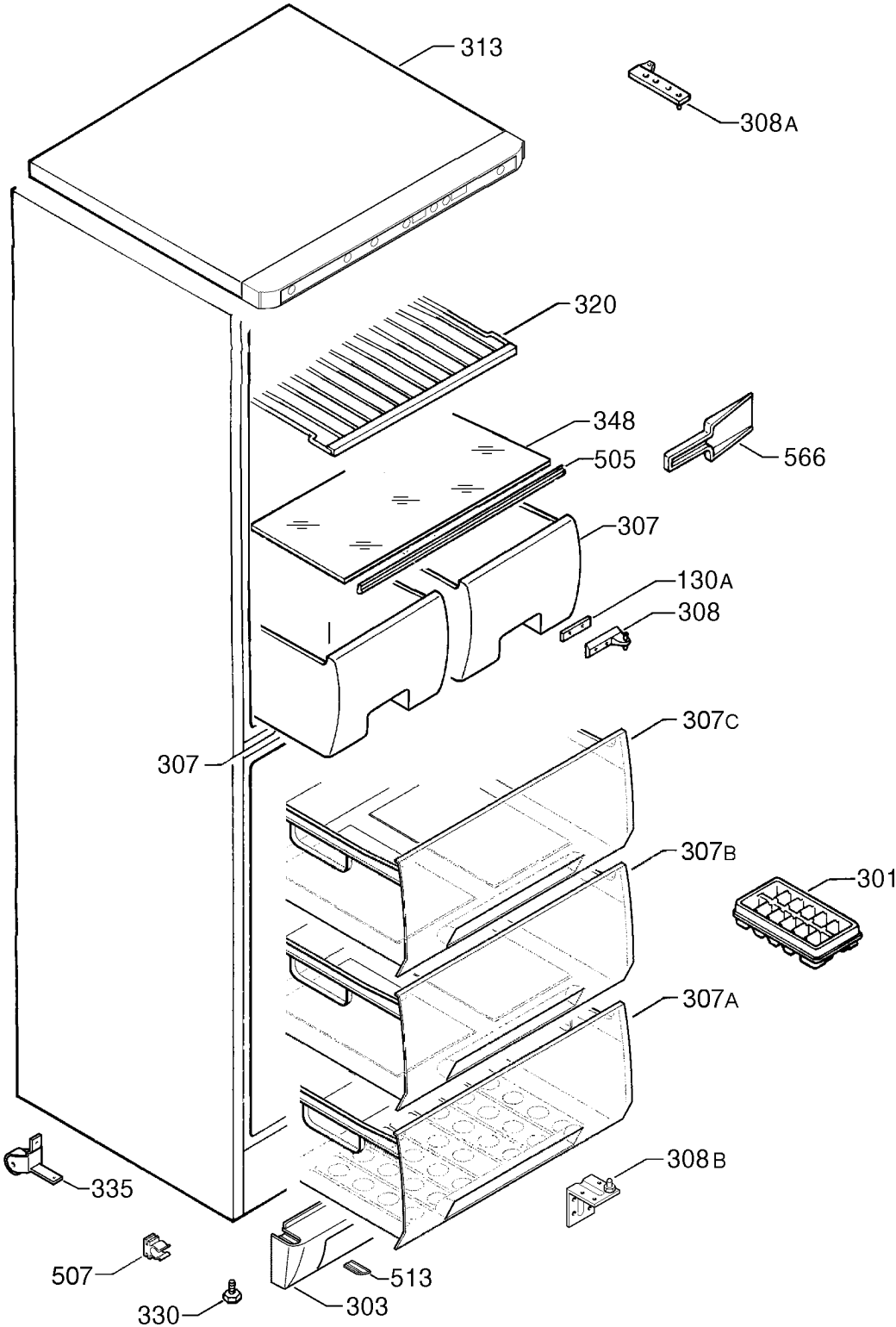

P09253017771