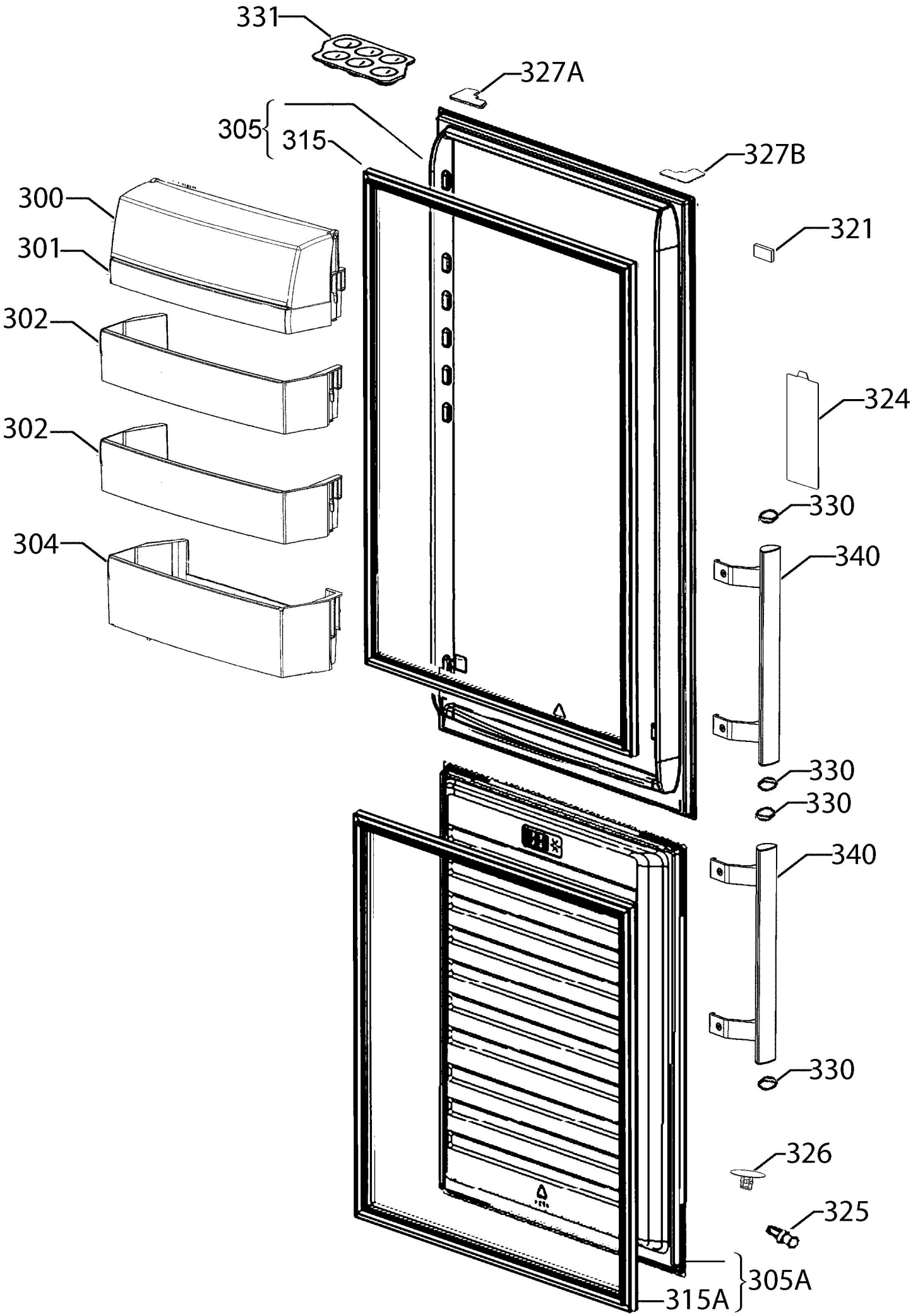

P09253073273