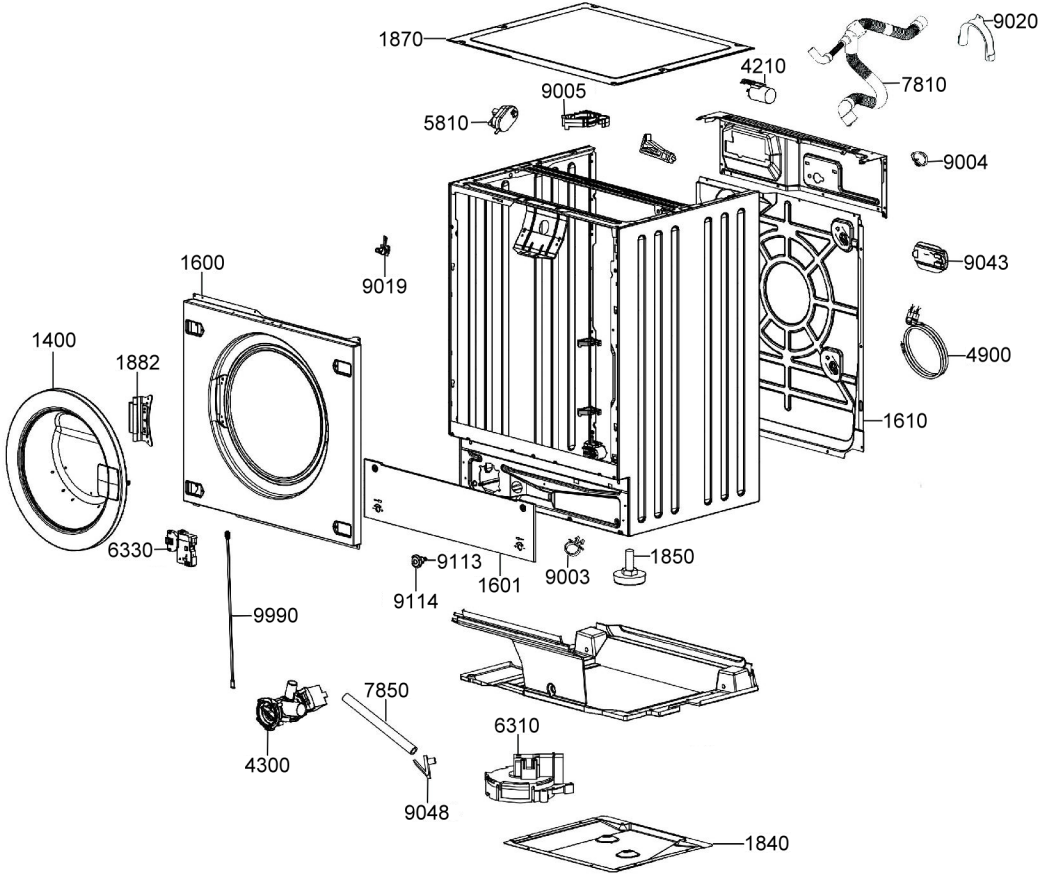

AWZ 612 | 198022-C
8575 914 29001