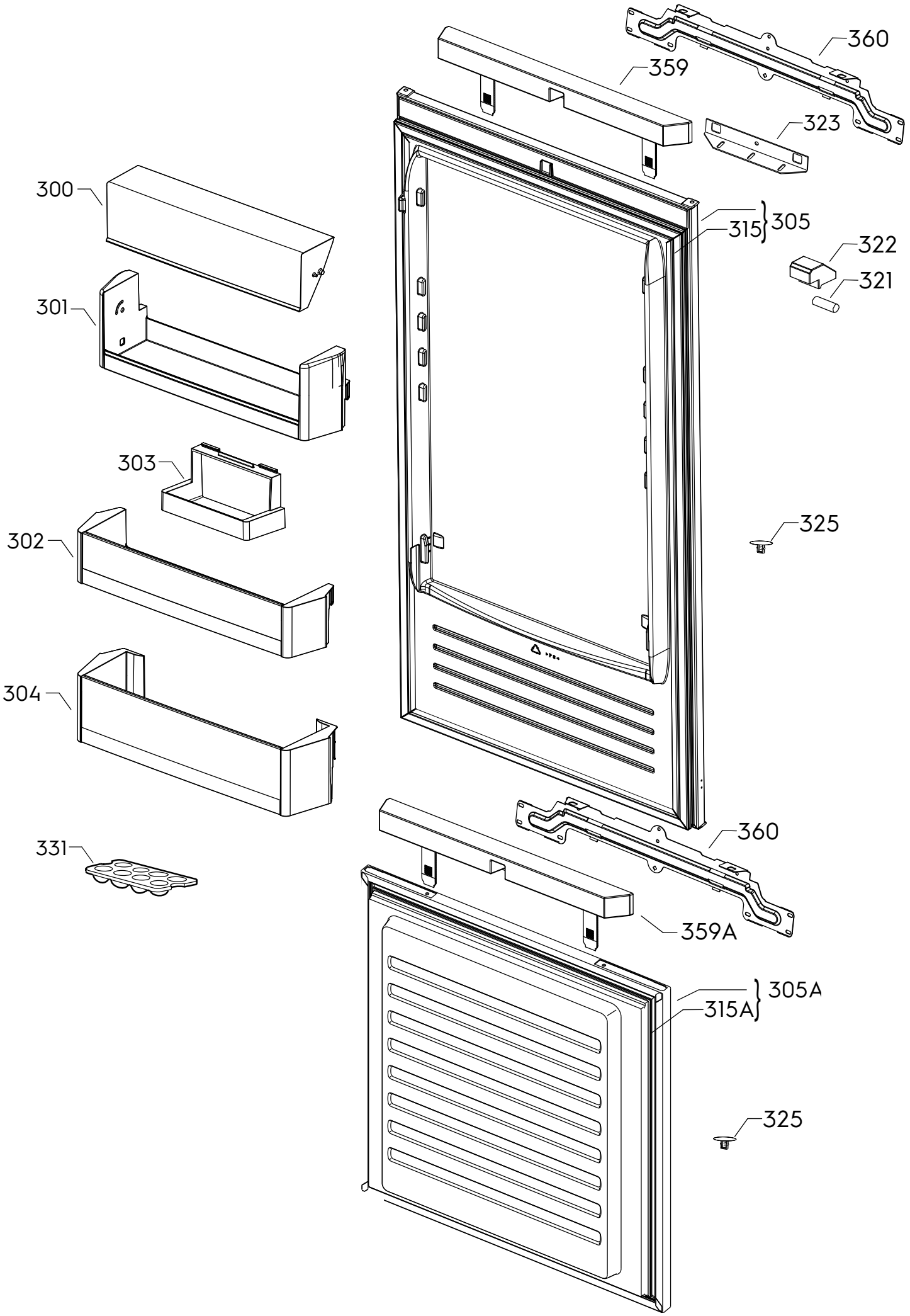

P09253077496