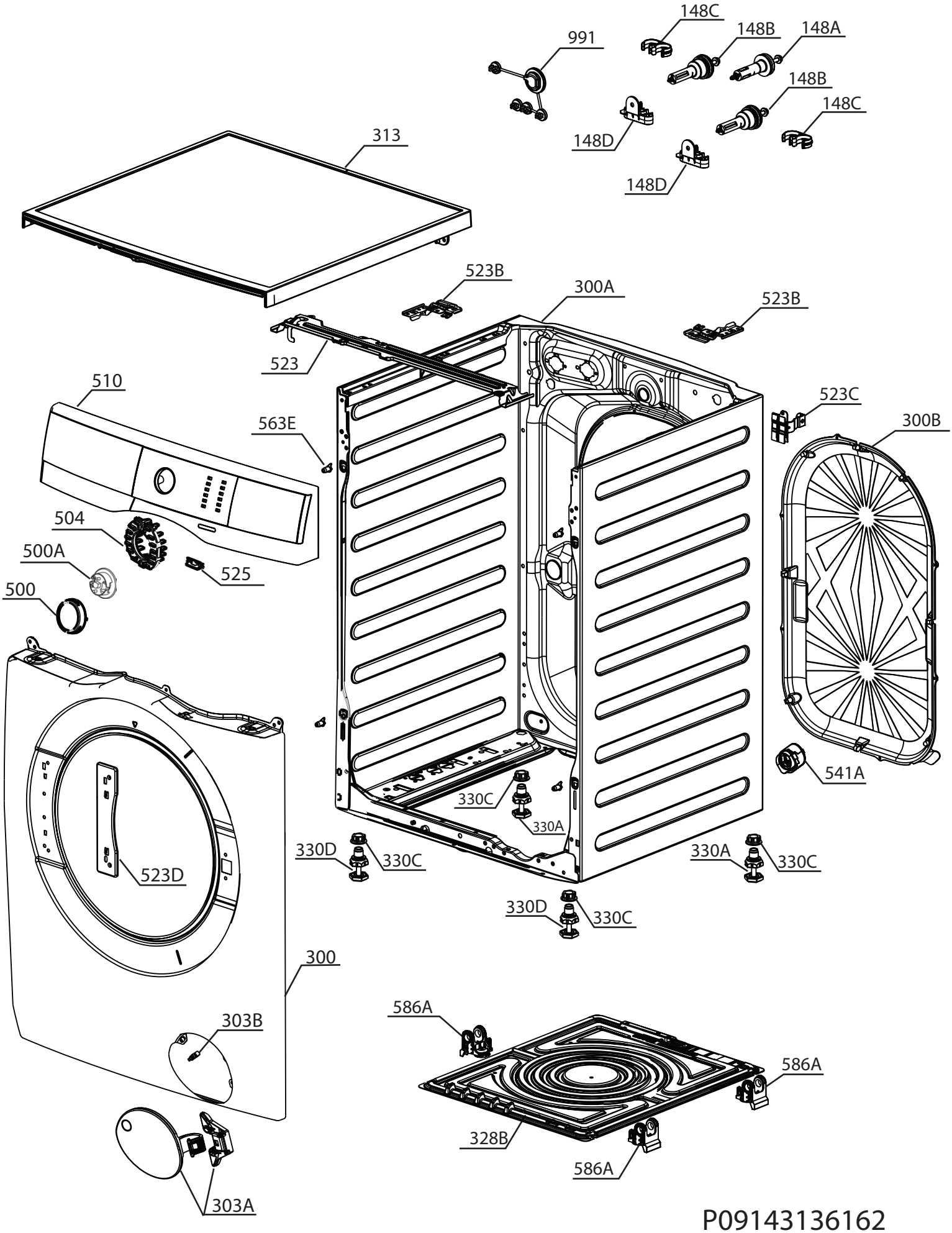

P09143136162